26 June 2015

Global registry

Created on 18 November 2004, pursuant to Article 6 of the Agreement concerning the establishing of global technical regulations for wheeled vehicles, equipment and parts which can be fitted and/or be used on wheeled vehicles (ECE/TRANS/132 and Corr.1) done at Geneva on 25 June 1998

Addendum 4: Global technical regulation No. 4

Test procedure for compression ignition (C.I.) engines and positive-ignition (P.I.) engines fuelled with natural gas (NG) or liquefied petroleum gas (LPG) with regard to the emission of pollutants

Amendment 3

Established in the Global Registry on 12 March 2015

UNITED NATIONS

GE.15-10574 (E)

1510574

Please recycle

Global technical regulation No. 4

Contents

		Page
A.	Statement of technical rationale and justification	4
1.	Technical and economic feasibility	4
2.	Anticipated benefits	5
3.	Potential cost effectiveness	5
B.	Text of the global technical regulation	6
1.	Purpose	6
2.	Scope	6
3.	Definitions, symbols and abbreviations	6
4.	General requirements	19
5.	Performance requirements	19
6.	Test conditions	27
7.	Test procedures	34
8.	Emission calculation	51
9.	Equipment specification and verification	72
Annexes		
1	(a) WHTC engine dynamometer schedule - (b) WHVC vehicle schedule	101
2	Reference fuels	134
3	Measurement equipment	136
4	Statistics	150
5	Carbon flow check	153
6	Example of calculation procedure	155
7	Installation of auxiliaries and equipment for emissions test	158
8	Reserved	160
9	Test procedure for engines installed in hybrid vehicles using the HILS method	161
	Appendix 1 - Hermite interpolation procedure	250
10	Test procedure for engines installed in hybrid vehicles using the powertrain method	251

A. Statement of technical rationale and justification

1. Technical and economic feasibility

1. The objective of the global technical regulation (gtr) No. 4 is to treat the procedure of the type approval for exhaust emissions from heavy-duty engines in hybrid vehicle applications and to further harmonize this gtr with gtr No.11.

2. Regulations governing the exhaust emissions from heavy-duty engines have been in existence for many years, but the introduction of hybrid powertrain technology requires adaptation of the testing procedures to better reflect the hybrid engine load conditions. To be able to correctly determine the impact of a heavy-duty hybrid vehicle on the environment in terms of its exhaust pollutant emissions, a test procedure, and consequently the gtr, needs to be adequately representative of real-world (hybrid) vehicle operation.

3. The proposed gtr is based on the Japanese Hardware In the Loop Simulation (HILS) method for heavy-duty hybrid vehicle certification and on the United States of America procedure of powertrain testing. The HILS procedure is documented in the technical guideline Kokujikan No. 281. After thorough research and discussion, it was selected as a basis for the development of Annex 9 to this gtr. Annex 9 reflects the enhancement of the method to allow the HILS procedure for hybrid engine emission certification and implementation in UNECE legislation. The United States of America (USA) procedure is documented in US Rule 40 CFR § 1037.550, and was selected as a basis for the development of Annex 10 to this gtr.

4. The test procedures reflect engine operation in heavy-duty hybrid vehicle operation as closely as possible, and provide methods for measuring the emission performance of hybrid engines. The HILS procedure for the first time introduces the concept of simulation into an emissions regulation. In summary, the procedures were developed so that they would be:

(a) Representative of engine operation in a heavy-duty hybrid vehicle application;

(b) Corresponding to state-of-the-art testing, sampling and measurement technology;

(c) Applicable in practice to existing and foreseeable future hybrid technologies; and

(d) Capable of providing a reliable ranking of exhaust emission levels from different (hybrid) engine types.

5. At this stage, the gtr is being presented without limit values. In this way, the test procedure can be given a legal status, based on which the Contracting Parties are required to start the process of implementing it into their national law. The limit values shall be developed by the Contracting Parties in accordance with their own rules of procedure.

6. When implementing the test procedure contained in this gtr as part of their national legislation or regulation, Contracting Parties are invited to use limit values which represent at least the same level of severity as their existing regulations, pending the development of harmonized limit values by the Executive Committee (AC.3) under the 1998 Agreement administered by the World Forum for Harmonization of Vehicle Regulations (WP.29). The performance levels (emissions test results) to be achieved in the gtr will, therefore, be discussed on the basis of the most recently agreed legislation in the Contracting Parties, as required by the 1998 Agreement.

2. Anticipated benefits

7. To enable manufacturers to develop new hybrid vehicle models more effectively and within a shorter time, it is desirable that gtr No. 4 should be amended to cover the special requirements for hybrid vehicles. These savings will accrue not only to the manufacturer, but more importantly, to the consumer as well.

8. However, amending a test procedure just to address the economic question does not address the mandate given when work on this amendment was first started. The test procedure shall also better reflect how heavy-duty engines are actually operated in hybrid vehicles. Compared to the measurement methods defined in this gtr, the new testing methods for hybrid vehicles are more representative of in-use driving behaviour of heavy-duty hybrid vehicles.

3. Potential cost effectiveness

9. Specific cost effectiveness values for this gtr have not been calculated. The decision by AC.3 move forward with this gtr without limit values is the key reason why this analysis has not been completed. This common agreement has been made knowing that specific cost effectiveness values are not immediately available. However, it is fully expected that this information will be developed, generally, in response to the adoption of this regulation in national requirements and also in support of developing harmonized limit values for the next step in this gtr's development. For example, each Contracting Party adopting this gtr into its national law will be expected to determine the appropriate level of stringency associated with using these new test procedures, with these new values being at least as stringent as comparable existing requirements. Also, experience will be gained by the heavy-duty engine industry as to any costs and cost savings associated with using this test procedure. The cost and emissions performance data can then be analyzed as part of the next step in this gtr development to determine the cost effectiveness values of the test procedures being adopted today along with the application of harmonized limit values in the future. While there are no values on calculated costs per ton, the belief of the GRPE experts is that there are clear benefits associated with this regulation.

B. Text of the global technical regulation

1. Purpose

This global technical regulation aims at providing a world-wide harmonized method for the determination of the levels of pollutant emissions from engines used in heavy vehicles and heavy hybrid vehicles in a manner which is representative of real world vehicle operation. The results can be the basis for the regulation of pollutant emissions within regional type approval and certification procedures.

2. Scope

2.1. This global technical regulation applies to the measurement of the emission of gaseous and particulate pollutants from compression-ignition engines and positive-ignition engines fuelled with Natural Gas (NG) or Liquefied Petroleum Gas (LPG), used for propelling motor vehicles of categories 1-2 and 2, having a design speed exceeding 25 km/h and having a maximum mass exceeding 3.5 tonnes.

2.2. This global technical regulation also applies to the measurement of the emission of gaseous and particulate pollutants from powertrains, used for propelling hybrid motor vehicles of categories 1-2 and 2, having a design speed exceeding 25 km/h and having a maximum mass exceeding 3.5 tonnes, being equipped with compression-ignition engines or positive-ignition engines fuelled with NG or LPG. It does not apply to plug-in hybrids.

3. Definitions, symbols and abbreviations

3.1. Definitions

For the purpose of this global technical regulation,

3.1.1. "*Cell*" means a single encased electrochemical unit containing one positive and one negative electrode which exhibits a voltage differential across its two terminals.

3.1.2. "*Continuous regeneration*" means the regeneration process of an exhaust after-treatment system that occurs either permanently or at least once per WHTC hot start test. Such a regeneration process will not require a special test procedure.

3.1.3. "*Controller-in-the-loop simulation*" means a HILS where the hardware is the controller.

3.1.4. "*C rate*" or "*n C*" means the constant current of the tested device, which takes 1/n hours to charge or discharge the tested device between 0 per cent of the state of charge and 100 per cent of the state of charge.

3.1.5. "*Delay time*" means the difference in time between the change of the component to be measured at the reference point and a system response of 10 per cent of the final reading (t_{10}) with the sampling probe being defined as the reference point. For the gaseous components, this is the transport time of the measured component from the sampling probe to the detector.

3.1.6. "*DeNO$_x$ system*" means an exhaust after-treatment system designed to reduce emissions of oxides of nitrogen (NO_x) (e.g. passive and active lean NO_x catalysts, NO_x adsorbers and Selective Catalytic Reduction (SCR) systems).

3.1.7. "*Depth of discharge*" means the discharge condition of a tested device as opposite of SOC and is expressed as a percentage of its rated capacity.

3.1.8. "*Diesel engine*" means an engine which works on the compression-ignition principle.

3.1.9. "*Drift*" means the difference between the zero or span responses of the measurement instrument after and before an emissions test.

3.1.10. "*Drivetrain*" means the connected elements of the powertrain downstream of the final energy converter.

3.1.11. "*Electric machine*" means an energy converter transferring electric energy into mechanical energy or vice versa for the purpose of vehicle propulsion.

3.1.12. "*Rechargeable Electric Energy Storage System (REESS)*" means a RESS storing electrical energy.

3.1.13. "*Enclosure*" means the part enclosing the internal units and providing protection against direct contact from any direction of access.

3.1.14. "*Energy* converter" means the part of the powertrain converting one form of energy into a different one for the primary purpose of vehicle propulsion.

3.1.15. "*Engine family*" means a manufacturers grouping of engines which, through their design as defined in paragraph 5.2. of this gtr, have similar exhaust emission characteristics; all members of the family shall comply with the applicable emission limit values.

3.1.16. "*Energy storage system*" means the part of the powertrain that can store chemical, electrical or mechanical energy and that may also be able to internally convert those energies without being directly used for vehicle propulsion, and which can be refilled or recharged externally and/or internally.

3.1.17. "*Engine system*" means the engine, the emission control system and the communication interface (hardware and messages) between the engine system Electronic Control Unit(s) (ECU) and any other powertrain or vehicle control unit.

3.1.18. "*Engine type*" means a category of engines which do not differ in essential engine characteristics.

3.1.19. "*Exhaust after-treatment system*" means a catalyst (oxidation or 3-way), particulate filter, deNOx system, combined deNOx particulate filter or any other emission-reducing device that is installed downstream of the engine. This definition excludes Exhaust Gas Recirculation (EGR), which is considered an integral part of the engine.

3.1.20. "*Full flow dilution method*" means the process of mixing the total exhaust flow with diluent prior to separating a fraction of the diluted exhaust stream for analysis.

3.1.21. "*Gaseous pollutants*" means carbon monoxide, hydrocarbons and/or non-methane hydrocarbons (assuming a ratio of CH1.85 for diesel, CH2.525 for LPG and CH2.93 for NG, and an assumed molecule CH3O0.5 for ethanol fuelled diesel engines), methane (assuming a ratio of CH4 for NG) and oxides of nitrogen (expressed in nitrogen dioxide (NO_2) equivalent).

3.1.22. "*Generator*" means an energy converter transferring mechanical energy into electric energy.

3.1.23. "*Hardware-In-the-Loop Simulation (HILS)*" means real time hybrid vehicle simulation running on a computer where a hardware component interacts with the simulation through an interface.

3.1.24. "*High speed (n_{hi})*" means the highest engine speed where 70 per cent of the declared maximum power occurs.

3.1.25. "*High voltage*" means the classification of an electric component or circuit, if its working voltage is > 60 V and ≤ 1,500 V DC or > 30 V and ≤ 1,000 V AC root mean square (rms).

3.1.26. "*High voltage bus*" means the electrical circuit, including the coupling system for charging the Electrical RESS (REESS) that operates on high voltage.

3.1.27. "*Hybrid vehicle*" means a vehicle with a powertrain containing at least two different types of energy converters and two different types of energy storage systems.

3.1.28. "*Hybrid electric vehicle*" means a hybrid vehicle with a powertrain containing electric machine(s) as energy converter(s).

3.1.29. "*Hydraulic RESS*" means an RESS storing hydraulic energy.

3.1.30. "*Internal Combustion Engine (ICE)*" means an energy converter with intermittent or continuous oxidation of combustible fuel.

3.1.31. "*Low speed (n_{lo})*" means the lowest engine speed where 55 per cent of the declared maximum power occurs.

3.1.32. "*Maximum power (P_{max})*" means the maximum power in kW as specified by the manufacturer.

3.1.33. "*Maximum torque speed*" means the engine speed at which the maximum torque is obtained from the engine, as specified by the manufacturer.

3.1.34. "*Mechanical RESS*" means an RESS storing mechanical energy.

3.1.35. "*Normalized torque*" means engine torque in per cent normalized to the maximum available torque at an engine speed.

3.1.36. "*Operator demand*" means an engine operator's input to control engine output. The operator may be a person (i.e., manual), or a governor (i.e., automatic) that mechanically or electronically signals an input that demands engine output. Input may be from an accelerator pedal or signal, a throttle-control lever or signal, a fuel lever or signal, a speed lever or signal, or a governor set point or signal.

3.1.37. "*Parallel hybrid*" means a hybrid vehicle which is not a series hybrid; it includes power-split and series-parallel hybrids.

3.1.38. "*Parent engine*" means an engine selected from an engine family in such a way that its emissions characteristics are representative for that engine family.

3.1.39. "*Particulate after-treatment device*" means an exhaust after-treatment system designed to reduce emissions of Particulate Matter (PM) through a mechanical, aerodynamic, diffusional or inertial separation.

3.1.40. "*Partial flow dilution method*" means the process of separating a part from the total exhaust flow, then mixing it with an appropriate amount of diluent prior to the particulate sampling filter.

3.1.41. "*Particulate Matter (PM)*" means any material collected on a specified filter medium after diluting exhaust with a clean filtered diluent to a temperature between 315 K (42 °C) and 325 K (52 °C); this is primarily carbon, condensed hydrocarbons, and sulphates with associated water.

3.1.42. "*Periodic regeneration*" means the regeneration process of an exhaust after-treatment system that occurs periodically in typically less than 100 hours of normal engine operation. During cycles where regeneration occurs, emission standards may be exceeded.

3.1.43. "*Pneumatic RESS*" means a RESS storing pneumatic energy.

3.1.44. "*Powertrain*" means the combination of energy storage system(s), energy converter(s) and drivetrain(s) (for the purpose of vehicle propulsion), and the communication interface (hardware and messages) among the powertrain or vehicle control units.

3.1.45. "*Powertrain-in-the-loop simulation*" means a HILS where the hardware is the powertrain.

3.1.46. "*Ramped steady state test cycle*" means a test cycle with a sequence of steady state engine test modes with defined speed and torque criteria at each mode and defined ramps between these modes World harmonized steady state cycle (WHSC).

3.1.47. "*Rated capacity*" means the electric charge capacity of a battery expressed in Cn (Ah) specified by the manufacturer.

3.1.48. "*Rated speed*" means the maximum full load speed allowed by the governor as specified by the manufacturer in his sales and service literature, or, if such a governor is not present, the speed at which the maximum power is obtained from the engine, as specified by the manufacturer in his sales and service literature.

3.1.49. "*Rechargeable Energy Storage System (RESS)*" means a system that provides energy (other than from fuel) for propulsion in its primary use. The RESS may include subsystem(s) together with the necessary ancillary systems for physical support, thermal management, electronic control and enclosures.

3.1.50. "*Response time*" means the difference in time between the change of the component to be measured at the reference point and a system response of 90 per cent of the final reading (t_{90}) with the sampling probe being defined as the reference point, whereby the change of the measured component is at least 60 per cent full scale (FS) and takes place in less than 0.1 second. The system response time consists of the delay time to the system and of the rise time of the system.

3.1.51. "*Rise time*" means the difference in time between the 10 per cent and 90 per cent response of the final reading ($t_{90} - t_{10}$).

3.1.52. "*Series hybrid*" means a hybrid vehicle where the power delivered to the driven wheels is provided solely by energy converters other than the internal combustion engine.

3.1.53. "*Span response*" means the mean response to a span gas during a 30 s time interval.

3.1.54. "*Specific emissions*" means the mass emissions expressed in g/kWh.

3.1.55. "*State Of Charge (SOC)*" means the available electrical charge in a tested device expressed as a percentage of its rated capacity.

3.1.56. "*Stop/start system*" means automatic stop and start of the internal combustion engine to reduce the amount of idling.

3.1.57. "*Subsystem*" means any functional assembly of RESS components.

3.1.58. "*Test cycle*" means a sequence of test points each with a defined speed and torque to be followed by the engine under steady state (WHSC) or transient operating conditions World harmonized transient cycle (WHTC).

3.1.59. "*Tested device*" means either the complete RESS or the subsystem of an RESS that is subject to the test.

3.1.60. "*Transformation time*" means the difference in time between the change of the component to be measured at the reference point and a system response of 50 per cent of the final reading (t50) with the sampling probe being defined as the reference point. The transformation time is used for the signal alignment of different measurement instruments.

3.1.61. "*Transient test cycle*" means a test cycle with a sequence of normalized speed and torque values that vary relatively quickly with time (WHTC).

3.1.62. "*Useful life*" means the relevant period of distance and/or time over which compliance with the relevant gaseous and particulate emission limits has to be assured.

3.1.63. "*Working voltage*" means the highest value of an electrical circuit voltage root-mean-square (rms), specified by the manufacturer, which may occur between any conductive part in open circuit conditions or under normal operating condition. If the electrical circuit is divided by galvanic isolation, the working voltage is defined for each divided circuit, respectively.

3.1.64. "*Zero response*" means the mean response to a zero gas during a 30 s time interval.

Figure 1

Definitions of system response

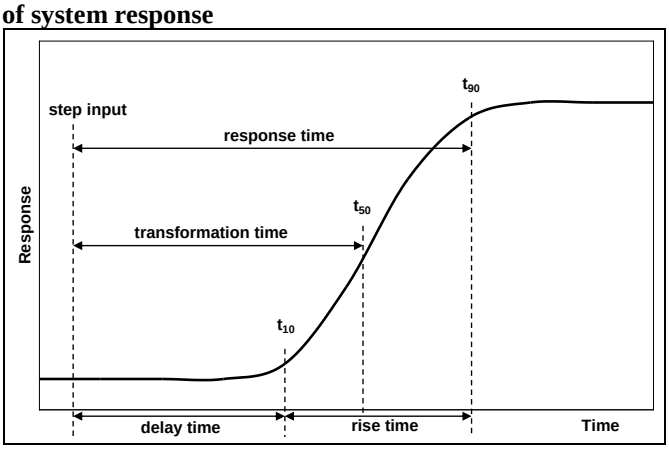

3.2. General symbols

Symbol	*Unit*	*Term*
a_1	-	Slope of the regression
a_0	-	y intercept of the regression
A/F_{st}	-	Stoichiometric air to fuel ratio
c_{gas}	ppm/Vol per cent	Concentration of the gaseous components
c_d	ppm/Vol per cent	Concentration on dry basis
c_w	ppm/Vol per cent	Concentration on wet basis
c_b	ppm/Vol per cent	Background concentration
C_d	-	Discharge coefficient of SSV
CVT	-	Continously Variable Transmission
d	m	Diameter
d_V	m	Throat diameter of venturi
D_0	m^3/s	PDP calibration intercept
D	-	Dilution factor
Δt	s	Time interval
e_{gas}	g/kWh	Specific emission of gaseous components
e_{PM}	g/kWh	Specific emission of particulates
e_r	g/kWh	Specific emission during regeneration
e_w	g/kWh	Weighted specific emission
E_{CO2}	per cent	CO_2 quench of NO_x analyzer
E_E	per cent	Ethane efficiency
E_{H2O}	per cent	Water quench of NO_x analyzer
E_M	per cent	Methane efficiency
E_{NOx}	per cent	Efficiency of NO_x converter
f	Hz	Data sampling rate
f_a	-	Laboratory atmospheric factor
F_s	-	Stoichiometric factor
H_a	g/kg	Absolute humidity of the intake air
H_d	g/kg	Absolute humidity of the diluent
i	-	Subscript denoting an instantaneous measurement (e.g. 1 Hz)
IEC	-	Internal Combustion Engine
k_c	-	Carbon specific factor
$k_{f,d}$	m^3/kg fuel	Combustion additional volume of dry exhaust
$k_{f,w}$	m^3/kg fuel	Combustion additional volume of wet exhaust
$k_{h,D}$	-	Humidity correction factor for NO_x for CI engines
$k_{h,G}$	-	Humidity correction factor for NO_x for PI engines
$k_{r,u}$	-	Upward regeneration adjustment factor

Symbol	*Unit*	*Term*
$k_{r,d}$	-	Downward regeneration adjustment factor
$k_{w,a}$	-	Dry to wet correction factor for the intake air
$k_{w,d}$	-	Dry to wet correction factor for the diluent
$k_{w,e}$	-	Dry to wet correction factor for the diluted exhaust gas
$k_{w,r}$	-	Dry to wet correction factor for the raw exhaust gas
K_V	-	CFV calibration function
λ	-	Excess air ratio
m_b	mg	Particulate sample mass of the diluent collected
m_d	kg	Mass of the diluent sample passed through the particulate sampling filters
m_{ed}	kg	Total diluted exhaust mass over the cycle
m_{edf}	kg	Mass of equivalent diluted exhaust gas over the test cycle
m_{ew}	kg	Total exhaust mass over the cycle
m_f	mg	Particulate sampling filter mass
m_{gas}	g	Mass of gaseous emissions over the test cycle
m_p	mg	Particulate sample mass collected
m_{PM}	g	Mass of particulate emissions over the test cycle
m_{se}	kg	Exhaust sample mass over the test cycle
m_{sed}	kg	Mass of diluted exhaust gas passing the dilution tunnel
m_{sep}	kg	Mass of diluted exhaust gas passing the particulate collection filters
m_{ssd}	kg	Mass of secondary diluent
M_a	g/mol	Molar mass of the intake air
M_d	g/mol	Molar mass of the diluent
M_e	g/mol	Molar mass of the exhaust
M_{gas}	g/mol	Molar mass of gaseous components
M	Nm	Torque
M_f	Nm	Torque absorbed by auxiliaries/equipment to be fitted
M_r	Nm	Torque absorbed by auxiliaries/equipment to be removed
n	-	Number of measurements
n_r	-	Number of measurements with regeneration
n	min^{-1}	Engine rotational speed
n_{hi}	min^{-1}	High engine speed
n_{lo}	min^{-1}	Low engine speed
n_{pref}	min^{-1}	Preferred engine speed
n_p	r/s	PDP pump speed

Symbol	*Unit*	*Term*
p_a	kPa	Saturation vapour pressure of engine intake air
p_b	kPa	Total atmospheric pressure
p_d	kPa	Saturation vapour pressure of the diluent
p_p	kPa	Absolute pressure
p_r	kPa	Water vapour pressure after cooling bath
p_s	kPa	Dry atmospheric pressure
P	kW	Power
P_f	kW	Power absorbed by auxiliaries/equipment to be fitted
P_r	kW	Power absorbed by auxiliaries/equipment to be removed
q_{mad}	kg/s	Intake air mass flow rate on dry basis
q_{maw}	kg/s	Intake air mass flow rate on wet basis
q_{mCe}	kg/s	Carbon mass flow rate in the raw exhaust gas
q_{mCf}	kg/s	Carbon mass flow rate into the engine
q_{mCp}	kg/s	Carbon mass flow rate in the partial flow dilution system
q_{mdew}	kg/s	Diluted exhaust gas mass flow rate on wet basis
q_{mdw}	kg/s	Diluent mass flow rate on wet basis
q_{medf}	kg/s	Equivalent diluted exhaust gas mass flow rate on wet basis
q_{mew}	kg/s	Exhaust gas mass flow rate on wet basis
q_{mex}	kg/s	Sample mass flow rate extracted from dilution tunnel
q_{mf}	kg/s	Fuel mass flow rate
q_{mp}	kg/s	Sample flow of exhaust gas into partial flow dilution system
q_{vCVS}	m^3/s	CVS volume rate
q_{vs}	dm^3/min	System flow rate of exhaust analyzer system
q_{vt}	cm^3/min	Tracer gas flow rate
r_d	-	Dilution ratio
r_D	-	Diameter ratio of SSV
r_h	-	Hydrocarbon response factor of the FID
r_m	-	Methanol response factor of the FID
r_p	-	Pressure ratio of SSV
r_s	-	Average sample ratio
r^2	-	Coefficient of determination
ρ	kg/m^3	Density
ρ_e	kg/m^3	Exhaust gas density
s	-	Standard deviation
T	K	Absolute temperature

Symbol	*Unit*	*Term*
T_a	K	Absolute temperature of the intake air
t	s	Time
t_{10}	s	Time between step input and 10 per cent of final reading
t_{50}	s	Time between step input and 50 per cent of final reading
t_{90}	s	Time between step input and 90 per cent of final reading
u	-	Ratio between densities of gas component and exhaust gas
V_0	m^3/r	PDP gas volume pumped per revolution
V_s	dm^3	System volume of exhaust analyzer bench
W_{act}	kWh	Actual cycle work of the test cycle
W_{ref}	kWh	Reference cycle work of the test cycle
X_0	m^3/r	PDP calibration function

3.2.1. Symbols of Annexes 9 and 10

Symbol	*Unit*	*Term*
A, B, C	-	Chassis dynamometer polynomial coefficients
A_{front}	m^2	Vehicle frontal area
ASG_{flg}	-	Automatic start gear detection flag
c	-	Tuning constant for hyperbolic function
C	F	Capacitance
CAP	Ah	Battery coulomb capacity
C_{cap}	F	Rated capacitance of capacitor
C_{drag}	-	Vehicle air drag coefficient
D_{pm}	m^3	Hydraulic pump/motor displacement
$Dt_{syncindi}$	s	Clutch synchronization indication
$Dyno_{measured}$	-	Chassis dynamometer A, B, C measured parameters
$Dyno_{settings}$	-	Chassis dynamometer A, B, C parameter setting
$Dyno_{target}$	-	Chassis dynamometer A, B, C target parameters
e	V	Battery open-circuit voltage
$E_{flywheel}$	J	Flywheel kinetic energy
f_{amp}	-	Torque converter mapped torque amplification
f_{pump}	Nm	Torque converter mapped pump torque
$F_{roadload}$	N	Chassis dynamometer road load
f_{roll}	-	Tyre rolling resistance coefficient
g	m/s^2	Gravitational coefficient
i_{aux}	A	Electric auxiliary current

Symbol	*Unit*	*Term*
i_{em}	A	Electric machine current
J	kgm^2	Rotating inertia
J_{aux}	kgm^2	Mechanical auxiliary load inertia
$J_{cl,1}$ / $J_{cl,2}$	kgm^2	Clutch rotational inertias
J_{em}	kgm^2	Electric machine rotational inertia
J_{fg}	kgm^2	Final gear rotational inertia
$J_{flywheel}$	kgm^2	Flywheel inertia
J_{gear}	kgm^2	Transmission gear rotational inertia
J_p / J_t	kgm^2	Torque converter pump / turbine rotational inertia
J_{pm}	kgm^2	Hydraulic pump/motor rotational inertia
$J_{powertrain}$	kgm^2	Total powertrain rotational inertia
$J_{retarder}$	kgm^2	Retarder rotational inertia
J_{spur}	kgm^2	Spur gear rotational inertia
J_{tot}	kgm^2	Total vehicle powertrain inertia
J_{wheel}	kgm^2	wheel rotational inertia
K_K	-	Proportional-Integral-Derivative (PID) anti-windup parameter
K_P, K_I, K_D	-	PID controller parameters
M_{aero}	Nm	Aerodynamic drag torque
M_{cl}	Nm	Clutch torque
$M_{cl,maxtorque}$	Nm	Maximum clutch torque
M_{CVT}	Nm	CVT torque
M_{drive}	Nm	Drive torque
M_{em}	Nm	Electric machine torque
$M_{flywheel,loss}$	W	Flywheel torque loss
M_{grav}	Nm	Gravitational torque
M_{ice}	Nm	Engine torque
$M_{mech,aux}$	Nm	Mechanical auxiliary load torque
M_{mech_brake}	Nm	Mechanical friction brake torque
M_p / M_t	Nm	Torque converter pump / turbine torque
M_{pm}	Nm	Hydraulic pump/motor torque
$M_{retarder}$	Nm	Retarder torque
M_{roll}	Nm	Rolling resistance torque
M_{start}	Nm	ICE starter motor torque
$M_{tc,loss}$	Nm	Torque converter torque loss during lock-up
$m_{vehicle}$	kg	Vehicle test mass
$m_{vehicle,0}$	kg	Vehicle curb mass
n_{act}	min^{-1}	Actual engine speed

Symbol	*Unit*	*Term*
n_{final}	min^{-1}	Final speed at end of test
n_{init}	min^{-1}	Initial speed at start of test
n_s / n_p	-	Number of series / parallel cells
P	kW	(hybrid system) rated power
p_{acc}	Pa	Hydraulic accumulator pressure
$pedal_{accelerator}$	-	Accelerator pedal position
$pedal_{brake}$	-	Brake pedal position
$pedal_{clutch}$	-	Clutch pedal position
$pedal_{limit}$	-	Clutch pedal threshold
$P_{el,aux}$	kW	Electric auxiliary power
$P_{el,em}$	kW	Electric machine electrical power
P_{em}	kW	Electric machine mechanical power
p_{gas}	Pa	Accumulator gas pressure
$P_{ice,loss}$	W	ICE power loss
$P_{loss,bat}$	W	Battery power loss
$P_{loss,em}$	kW	Electric machine power loss
$P_{mech,aux}$	kW	Mechanical auxiliary load power
P_{rated}	kW	(hybrid system) rated power
p_{res}	Pa	hydraulic accumulator sump pressure
Q_{pm}	m^3/s	hydraulic pump/motor volumetric flow
$R_{bat,th}$	K/W	battery thermal resistance
r_{CVT}	-	CVT ratio
$R_{em,th}$	K/W	thermal resistance for electric machine
r_{fg}	-	Final gear ratio
r_{gear}	-	Transmission gear ratio
R_i	Ω	Capacitor internal resistance
R_{i0}, R	Ω	Battery internal resistance
r_{spur}	-	Spur gear ratio
r_{wheel}	m	Wheel radius
SG_{flg}	-	Skip gear flag
$slip_{limit}$	rad/s	Clutch speed threshold
SOC	-	State-of-charge
$T_{act}(n_{act})$	Nm	Bctual engine torque at actual engine speed
T_{bat}	K	Battery temperature
$T_{bat,cool}$	K	Battery coolant temperature
$T_{capacitor}$	K	Capacitor temperature
T_{clutch}	s	Clutch time
T_{em}	K	Electric machine temperature

Symbol	*Unit*	*Term*
$T_{em,cool}$	K	Electric machine coolant temperature
$T_{ice,oil}$	K	ICE oil temperature
$T_{max}(n_{act})$	Nm	Maximum engine torque at actual engine speed
T_{norm}	-	Normalized duty cycle torque value
$T_{startgear}$	s	Gear shift time prior to driveaway
u	V	Voltage
u_C	V	Capacitor voltage
u_{cl}	-	Clutch pedal actuation
U_{final}	V	Final voltage at end of test
u_{in} / u_{out}	V	Input / output voltage
U_{init}	V	Initial voltage at start of test
u_{req}	V	Requested voltage
$V_{C,min/max}$	V	Capacitor minimum / maximum voltage
V_{gas}	m^3	Accumulator gas volume
v_{max}	km/h	Maximum vehicle speed
$V_{nominal}$	V	Rated nominal voltage for REESS
$v_{vehicle}$	m/s	Vehicle speed
W_{act}	kWh	Actual engine work
W_{ice_HILS}	kWh	Engine work in the HILS simulated run
W_{ice_test}	kWh	Engine work in chassis dynamometer test
W_{sys}	kWh	Hybrid system work
W_{sys_HILS}	kWh	Hybrid system work in the HILS simulated run
W_{sys_test}	kWh	Hybrid system work in powertrain test
x	-	Control signal
x_{DCDC}	-	DC/DC converter control signal
α_{road}	rad	Road gradient
γ	-	Adiabatic index
ΔAh	Ah	Net change of REESS coulombic charge
ΔE	kWh	Net energy change of RESS
ΔE_{HILS}	kWh	Net energy change of RESS in HILS simulated running
ΔE_{test}	kWh	Net energy change of RESS in test
η_{CVT}	-	CVT efficiency
η_{DCDC}	-	DC/DC converter efficiency
η_{em}	-	Electric machine efficiency
η_{fg}	-	Final gear efficiency
η_{gear}	-	Transmission gear efficiency
η_{pm}	-	Hydraulic pump/motor mechanical efficiency
η_{spur}	-	Spur gear efficiency

Symbol	*Unit*	*Term*
η_{vpm}	-	Hydraulic pump/motor volumetric efficiency
ρ_a	kg/m^3	Air density
τ_1	-	First order time response constant
$\tau_{bat,heat}$	J/K	Battery thermal capacity
τ_{close}	s	Clutch closing time constant
$\tau_{driveaway}$	s	Clutch closing time constant for driveaway
$\tau_{em,heat}$	J/K	Thermal capacity for electric machine mass
τ_{open}	s	Clutch opening time constant
ω	rad/s	Shaft rotational speed
ω_p / ω_t	rad/s	Torque converter pump / turbine speed
$\dot{\omega}$	rad/s^2	Rotational acceleration

3.3. Symbols and abbreviations for the fuel composition

w_{ALF}	Hydrogen content of fuel, per cent mass
w_{BET}	Carbon content of fuel, per cent mass
w_{GAM}	Sulphur content of fuel, per cent mass
w_{DEL}	Nitrogen content of fuel, per cent mass
w_{EPS}	Oxygen content of fuel, per cent mass
α	Molar hydrogen ratio (H/C)
γ	Molar sulphur ratio (S/C)
δ	Molar nitrogen ratio (N/C)
ε	Molar oxygen ratio (O/C)

referring to a fuel $CH_\alpha O_\varepsilon N_\delta S_\gamma$

3.4. Symbols and abbreviations for the chemical components

C1	Carbon 1 equivalent hydrocarbon
CH_4	Methane
C_2H_6	Ethane
C_3H_8	Propane
CO	Carbon monoxide
CO_2	Carbon dioxide
DOP	Di-octylphtalate
HC	Hydrocarbons
H_2O	Water
NMHC	Non-methane hydrocarbons
NO_x	Oxides of nitrogen
NO	Nitric oxide
NO_2	Nitrogen dioxide
PM	Particulate matter

3.5. Abbreviations

CFV	Critical Flow Venturi
CLD	Chemiluminescent Detector
CVS	Constant Volume Sampling
$deNO_x$	NO_x after-treatment system
EGR	Exhaust gas recirculation
FID	Flame Ionization Detector
GC	Gas Chromatograph
HCLD	Heated Chemiluminescent Detector
HEC	Hybrid engine cycle
HFID	Heated Flame Ionization Detector
HILS	Hardware-in-the-loop simulation
HPC	Hybrid powertrain cycle
LPG	Liquefied Petroleum Gas
NDIR	Non-Dispersive Infrared (Analyzer)
NG	Natural Gas
NMC	Non-Methane Cutter
PDP	Positive Displacement Pump
Per cent FS	Per cent of full scale
PFS	Partial Flow System
RESS	Rechargeable Energy Storage System
REESS	Electrical RESS
RHESS	Hydraulic RESS
RMESS	Mechanical RESS
RPESS	Pneumatic RESS
SSV	Subsonic Venturi
VGT	Variable Geometry Turbine
WHSC	World harmonized steady state cycle
WHTC	World harmonized transient cycle
WHVC	World harmonized vehicle cycle

4. General requirements

The engine system shall be so designed, constructed and assembled as to enable the engine in normal use to comply with the provisions of this gtr during its useful life, as defined by the Contracting Party, including when installed in the vehicle.

5. Performance requirements

When implementing the test procedure contained in this gtr as part of their national legislation, Contracting Parties to the 1998 Agreement are encouraged to use limit values which represent at least the same level of severity as their existing regulations; pending the development of harmonized

limit values, by the Executive Committee (AC.3) of the 1998 Agreement, for inclusion in the gtr at a later date.

5.1. Emission of gaseous and particulate pollutants

5.1.1. Internal combustion engine

The emissions of gaseous and particulate pollutants by the engine shall be determined on the WHTC and WHSC test cycles, as described in paragraph 7. This paragraph also applies to vehicles with integrated starter/generator systems where the generator is not used for propelling the vehicle, for example stop/start systems.

5.1.2. Hybrid powertrain

The emissions of gaseous and particulate pollutants by the hybrid powertrain shall be determined on the duty cycles derived in accordance with Annex 9 for the HEC or Annex 10 for the HPC.

Hybrid powertrains may be tested in accordance with paragraph 5.1.1., if the ratio between the propelling power of the electric motor, as measured in accordance with paragraph A.9.8.4. at speeds above idle speed, and the rated power of the engine is less than or equal to 5 per cent.

5.1.2.1. The Contracting Parties may decide to not make paragraph 5.1.2. and the related provisions for hybrid vehicles, specifically Annexes 9 and 10, compulsory in their regional transposition of this gtr and may choose to transpose HILS and/or Powertrain testing.

In such case, the internal combustion engine used in the hybrid powertrain shall meet the applicable requirements of paragraph 5.1.1.

5.1.3. Measurement system

The measurement systems shall meet the linearity requirements in paragraph 9.2. and the specifications in paragraph 9.3. (gaseous emissions measurement), paragraph 9.4. (particulate measurement) and in Annex 3.

Other systems or analyzers may be approved by the type approval or certification authority, if it is found that they yield equivalent results in accordance with paragraph 5.1.4.

5.1.4. Equivalency

The determination of system equivalency shall be based on a seven-sample pair (or larger) correlation study between the system under consideration and one of the systems of this gtr.

"*Results*" refer to the specific cycle weighted emissions value. The correlation testing is to be performed at the same laboratory, test cell, and on the same engine, and is preferred to be run concurrently. The equivalency of the sample pair averages shall be determined by F-test and t-test statistics as described in Annex 4, paragraph A.4.3., obtained under the laboratory test cell and the engine conditions described above. Outliers shall be determined in accordance with ISO 5725 and excluded from the database. The systems to be used for correlation testing shall be subject to the approval by the Type Approval or certification Authority.

5.2. Engine family

5.2.1. General

An engine family is characterized by design parameters. These shall be common to all engines within the family. The engine manufacturer may decide which engines belong to an engine family, as long as the membership criteria listed in paragraph 5.2.3. are respected. The engine family shall be approved by the type approval or certification authority. The manufacturer shall provide to the type approval or certification authority the appropriate information relating to the emission levels of the members of the engine family.

5.2.2. Special cases

In some cases there may be interaction between parameters. This shall be taken into consideration to ensure that only engines with similar exhaust emission characteristics are included within the same engine family. These cases shall be identified by the manufacturer and notified to the type approval or certification authority. It shall then be taken into account as a criterion for creating a new engine family.

In case of devices or features, which are not listed in paragraph 5.2.3. and which have a strong influence on the level of emissions, this equipment shall be identified by the manufacturer on the basis of good engineering practice, and shall be notified to the type approval or certification authority. It shall then be taken into account as a criterion for creating a new engine family.

In addition to the parameters listed in paragraph 5.2.3., the manufacturer may introduce additional criteria allowing the definition of families of more restricted size. These parameters are not necessarily parameters that have an influence on the level of emissions.

5.2.3. Parameters defining the engine family

5.2.3.1. Combustion cycle

(a) 2-stroke cycle

(b) 4-stroke cycle

(c) Rotary engine

(d) Others

5.2.3.2. Configuration of the cylinders

5.2.3.2.1. Position of the cylinders in the block

(a) V

(b) In line

(c) Radial

(d) Others (F, W, etc.)

5.2.3.2.2. Relative position of the cylinders

Engines with the same block may belong to the same family as long as their bore center-to-center dimensions are the same.

5.2.3.3. Main cooling medium

(a) Air

(b) Water

(c) Oil

5.2.3.4. Individual cylinder displacement

5.2.3.4.1. Engine with a unit cylinder displacement ≥ 0.75 dm³

In order for engines with a unit cylinder displacement of ≥ 0.75 dm³ to be considered to belong to the same engine family, the spread of their individual cylinder displacements shall not exceed 15 per cent of the largest individual cylinder displacement within the family.

5.2.3.4.2. Engine with a unit cylinder displacement < 0.75 dm³

In order for engines with a unit cylinder displacement of < 0.75 dm³ to be considered to belong to the same engine family, the spread of their individual cylinder displacements shall not exceed 30 per cent of the largest individual cylinder displacement within the family.

5.2.3.4.3. Engine with other unit cylinder displacement limits

Engines with an individual cylinder displacement that exceeds the limits defined in paragraphs 5.2.3.4.1. and 5.2.3.4.2. may be considered to belong to the same family with the approval of the Type Approval or certification Authority. The approval shall be based on technical elements (calculations, simulations, experimental results etc.) showing that exceeding the limits does not have a significant influence on the exhaust emissions.

5.2.3.5. Method of air aspiration

(a) Naturally aspirated

(b) Pressure charged

(c) Pressure charged with charge cooler

5.2.3.6. Fuel type

(a) Diesel

(b) Natural Gas (NG)

(c) Liquefied Petroleum Gas (LPG)

(d) Ethanol

5.2.3.7. Combustion chamber type

(a) Open chamber

(b) Divided chamber

(c) Other types

5.2.3.8. Ignition Type

(a) Positive ignition

(b) Compression ignition

5.2.3.9. Valves and porting

(a) Configuration

(b) Number of valves per cylinder

5.2.3.10. Fuel supply type

(a) Liquid fuel supply type

(i) Pump and (high pressure) line and injector

(ii) In-line or distributor pump

(iii) Unit pump or unit injector

(iv) Common rail

(v) Carburettor(s)

(vi) Others

(b) Gas fuel supply type

(i) Gaseous

(ii) Liquid

(iii) Mixing units

(iv) Others

(c) Other types

5.2.3.11. Miscellaneous devices

(a) Exhaust Gas Recirculation (EGR)

(b) Water injection

(c) Air injection

(d) Others

5.2.3.12. Electronic control strategy

The presence or absence of anECU on the engine is regarded as a basic parameter of the family.

In the case of electronically controlled engines, the manufacturer shall present the technical elements explaining the grouping of these engines in the same family, i.e. the reasons why these engines can be expected to satisfy the same emission requirements.

These elements can be calculations, simulations, estimations, description of injection parameters, experimental results, etc.

Examples of controlled features are:

(a) Timing

(b) Injection pressure

(c) Multiple injections

(d) Boost pressure

(e) VGT

(f) EGR

5.2.3.13. Exhaust after-treatment systems

The function and combination of the following devices are regarded as membership criteria for an engine family:

(a) Oxidation catalyst

(b) Three-way catalyst

(c) $DeNO_x$ system with selective reduction of NO_x (addition of reducing agent)

(d) Other $DeNO_x$ systems

(e) Particulate trap with passive regeneration

(f) Particulate trap with active regeneration

(g) Other particulate traps

(h) Other devices

When an engine has been certified without after-treatment system, whether as parent engine or as member of the family, then this engine, when equipped with an oxidation catalyst, may be included in the same engine family, if it does not require different fuel characteristics.

If it requires specific fuel characteristics (e.g. particulate traps requiring special additives in the fuel to ensure the regeneration process), the decision to include it in the same family shall be based on technical elements provided by the manufacturer. These elements shall indicate that the expected emission level of the equipped engine complies with the same limit value as the non-equipped engine.

When an engine has been certified with after-treatment system, whether as parent engine or as member of a family, whose parent engine is equipped with the same after-treatment system, then this engine, when equipped without after-treatment system, shall not be added to the same engine family.

5.2.4. Choice of the parent engine

5.2.4.1. Compression ignition engines

Once the engine family has been agreed by the type approval or certification authority, the parent engine of the family shall be selected using the primary criterion of the highest fuel delivery per stroke at the declared maximum torque speed. In the event that two or more engines share this primary criterion, the parent engine shall be selected using the secondary criterion of highest fuel delivery per stroke at rated speed.

5.2.4.2. Positive ignition engines

Once the engine family has been agreed by the type approval or certification authority, the parent engine of the family shall be selected using the primary criterion of the largest displacement. In the event that two or more engines share this primary criterion, the parent engine shall be selected using the secondary criterion in the following order of priority:

(a) The highest fuel delivery per stroke at the speed of declared rated power;

(b) The most advanced spark timing;

(c) The lowest EGR rate.

5.2.4.3. Remarks on the choice of the parent engine

The Type Approval or certification Authority may conclude that the worst-case emission of the family can best be characterized by testing additional engines. In this case, the engine manufacturer shall submit the appropriate information to determine the engines within the family likely to have the highest emissions level.

If engines within the family incorporate other features which may be considered to affect exhaust emissions, these features shall also be identified and taken into account in the selection of the parent engine.

If engines within the family meet the same emission values over different useful life periods, this shall be taken into account in the selection of the parent engine.

5.3. Hybrid powertrain family

5.3.1. The general hybrid powertrain family is characterized by design parameters and by the interactions between the design parameters. The design parameters shall be common to all hybrid powertrains within the family. The manufacturer may decide, which hybrid powertrain belongs to the family, as long as the membership criteria listed in paragraph 5.3.3. are respected. The hybrid powertrain family shall be approved by the Type Approval or certification Authority. The manufacturer shall provide to the Type Approval or certification Authority all appropriate information relating to the emission levels of the members of the hybrid powertrain family.

5.3.2. Special requirements

For a hybrid powertrain, interaction between design parameters shall be identified by the manufacturer in order to ensure that only hybrid powertrains with similar exhaust emission characteristics are included within the same hybrid powertrain family. These interactions shall be notified to the type approval or certification authority, and shall be taken into account as an additional criterion beyond the parameters listed in paragraph 5.3.3. for creating the hybrid powertrain family.

The individual test cycles HEC and HPC depend on the configuration of the hybrid powertrain. In order to determine if a hybrid powertrain belongs to the same family, or if a new hybrid powertrain configuration is to be added to an existing family, the manufacturer shall simulate a HILS test or run a powertrain test with this powertrain configuration and record the resulting duty cycle.

The duty cycle torque values shall be normalized as follows:

$$T_{norm} = \frac{T_{act}(n_{act})}{T_{max}(n_{act})} \qquad (1)$$

Where:

T_{norm} are the normalized duty cycle torque values

n_{act} is the actual engine speed, min^{-1}

$T_{act}(n_{act})$ is the actual engine torque at actual engine speed, Nm

$T_{max}(n_{act})$ is the maximum engine torque at actual engine speed, Nm

The normalized duty cycle shall be evaluated against the normalized duty cycle of the parent hybrid powertrain by means of a linear regression analysis. This analysis shall be performed at 1 Hz or greater. A hybrid powertrain shall be deemed to belong to the same family, if the criteria of Table 2 in paragraph 7.8.8. are met.

5.3.2.1. In addition to the parameters listed in paragraph 5.3.3., the manufacturer may introduce additional criteria allowing the definition of families of more restricted size. These parameters are not necessarily parameters that have an influence on the level of emissions.

5.3.3. Parameters defining the hybrid powertrain family

5.3.3.1. Hybrid topology (architecture)

(a) Parallel

(b) Series

5.3.3.2. Internal combustion engine

The engine family criteria of paragraph 5.2 shall be met when selecting the engine for the hybrid powertrain family.

5.3.3.3. Energy converter

(a) Electric

(b) Hydraulic

(c) Other

5.3.3.4. RESS

(a) Electric

(b) Hydraulic

(c) Flywheel

(c) Other

5.3.3.5. Transmission

(a) Manual

(b) Automatic

(c) Dual clutch

(d) Other

5.3.3.6. Hybrid control strategy

The hybrid control strategy is a key parameter of the hybrid powertrain family. The manufacturer shall present the technical elements of the hybrid control strategy explaining the grouping of hybrid powertrains in the same family, i.e. the reasons why these powertrains can be expected to satisfy the same emission requirements.

These elements can be calculations, simulations, estimations, description of the hybrid ECU, experimental results, etc.

Examples of controlled features are:

(a) Engine emission strategy

(b) Power management

(c) Energy management

5.3.4. Choice of the parent hybrid powertrain

Once the powertrain family has been agreed by the type approval or certification authority, the parent hybrid powertrain of the family shall be selected using the internal combustion engine with the highest power.

In case the engine with the highest power is used in multiple hybrid powertrains, the parent hybrid powertrain shall be the hybrid powertrain with the highest ratio of internal combustion engine to hybrid system work determined by HILS simulation or powertrain test.

6. Test conditions

The general test conditions laid down in this paragraph shall apply to testing of the internal combustion engine (WHTC, WHSC, HEC) and of the powertrain (HPC) as specified in Annex 10.

6.1. Laboratory test conditions

The absolute temperature (T_a) of the engine intake air expressed in Kelvin, and the dry atmospheric pressure (p_s), expressed in kPa shall be measured and the parameter fa shall be determined in accordance with the following provisions. In multi-cylinder engines having distinct groups of intake manifolds, such as in a "Vee" engine configuration, the average temperature of the distinct groups shall be taken. The parameter fa shall be reported with the test results. For better repeatability and reproducibility of the test results, it is recommended that the parameter fa be such that: $0.93 \leq fa \leq 1.07$. Contracting Parties can make the parameter fa compulsory.

(a) Compression-ignition engines:

Naturally aspirated and mechanically supercharged engines:

$$f_a = \left(\frac{99}{p_s}\right) \times \left(\frac{T_a}{298}\right)^{0.7} \quad (2)$$

Turbocharged engines with or without cooling of the intake air:

$$f_a = \left(\frac{99}{p_s}\right)^{0.7} \times \left(\frac{T_a}{298}\right)^{1.5} \quad (3)$$

(b) Positive ignition engines:

$$f_a = \left(\frac{99}{p_s}\right)^{1.2} \times \left(\frac{T_a}{298}\right)^{0.6} \quad (4)$$

6.2. Engines with charge air-cooling

The charge air temperature shall be recorded and shall be, at the rated speed and full load, within ±5 K of the maximum charge air temperature specified by the manufacturer. The temperature of the cooling medium shall be at least 293 K (20 °C).

If a test laboratory system or external blower is used, the coolant flow rate shall be set to achieve a charge air temperature within ±5 K of the maximum charge air temperature specified by the manufacturer at the rated speed and full load. Coolant temperature and coolant flow rate of the charge air cooler at the above set point shall not be changed for the whole test cycle, unless this results in unrepresentative overcooling of the charge air. The charge air cooler volume shall be based upon good engineering practice and shall be representative of the production engine's in-use installation. The laboratory system shall be designed to minimize accumulation of condensate. Any accumulated condensate shall be drained and all drains shall be completely closed before emission testing.

If the engine manufacturer specifies pressure-drop limits across the charge-air cooling system, it shall be ensured that the pressure drop across the charge-air cooling system at engine conditions specified by the manufacturer is within the manufacturer's specified limit(s). The pressure drop shall be measured at the manufacturer's specified locations.

6.3. Engine power

The basis of specific emissions measurement is engine power and cycle work as determined in accordance with paragraphs 6.3.1. to 6.3.5.

For a hybrid powertrain, the basis of specific emissions measurement is system power and cycle work as determined in accordance with paragraph A.9.2.6.2. or paragraph A.10.7., respectively.

6.3.1. General engine installation

The engine shall be tested with the auxiliaries/equipment listed in Annex 7.

If auxiliaries/equipment are not installed as required, their power shall be taken into account in accordance with paragraphs 6.3.2. to 6.3.5.

6.3.2. Auxiliaries/equipment to be fitted for the emissions test

If it is inappropriate to install the auxiliaries/equipment required in accordance with Annex 7 on the test bench, the power absorbed by them shall be determined and subtracted from the measured engine power (reference and actual) over the whole engine speed range of the WHTC and over the test speeds of the WHSC.

6.3.3. Auxiliaries/equipment to be removed for the test

Where the auxiliaries/equipment not required in accordance with Annex 7 cannot be removed, the power absorbed by them may be determined and added to the measured engine power (reference and actual) over the whole engine speed range of the WHTC and over the test speeds of the WHSC. If this value is greater than 3 per cent of the maximum power at the test speed it shall be demonstrated to the type approval or certification authority.

6.3.4. Determination of auxiliary power

The power absorbed by the auxiliaries/equipment needs only be determined, if:

(a) Auxiliaries/equipment required in accordance with Annex 7, are not fitted to the engine; and/or

(b) Auxiliaries/equipment not required in accordance with Annex 7, are fitted to the engine.

The values of auxiliary power and the measurement/calculation method for determining auxiliary power shall be submitted by the engine manufacturer for the whole operating area of the test cycles, and approved by the certification or type approval authority.

6.3.5. Engine cycle work

The calculation of reference and actual cycle work (see paragraphs 7.4.8. and 7.8.6.) shall be based upon engine power in accordance with paragraph 6.3.1. In this case, P_f and P_r of equation 5 are zero, and P equals P_m.

If auxiliaries/equipment are installed in accordance with paragraphs 6.3.2. and/or 6.3.3., the power absorbed by them shall be used to correct each instantaneous cycle power value $P_{m,i}$, as follows:

$$P_i = P_{m,i} - P_{f,i} + P_{r,i} \qquad (5)$$

Where:

$P_{m,i}$ is the measured engine power, kW

$P_{f,i}$ is the power absorbed by auxiliaries/equipment to be fitted, kW

$P_{r,i}$ is the power absorbed by auxiliaries/equipment to be removed, kW

6.4. Engine air intake system

An engine air intake system or a test laboratory system shall be used presenting an air intake restriction within ±300 Pa of the maximum value specified by the manufacturer for a clean air cleaner at the rated speed and full load. The static differential pressure of the restriction shall be measured at the location specified by the manufacturer.

6.5. Engine exhaust system

An engine exhaust system or a test laboratory system shall be used presenting an exhaust backpressure within 80 to 100 per cent of the maximum value specified by the manufacturer at the rated speed and full load. If the maximum restriction is 5 kPa or less, the set point shall be no less than 1.0 kPa from the maximum. The exhaust system shall conform to the requirements for exhaust gas sampling, as set out in paragraphs 9.3.10. and 9.3.11.

6.6. Engine with exhaust after-treatment system

If the engine is equipped with an exhaust after-treatment system, the exhaust pipe shall have the same diameter as found in-use, or as specified by the manufacturer, for at least four pipe diameters upstream of the expansion section containing the after-treatment device. The distance from the exhaust manifold flange or turbocharger outlet to the exhaust after-treatment system shall be the same as in the vehicle configuration or within the distance specifications of the manufacturer. The exhaust backpressure or restriction shall follow the same criteria as above, and may be set with a valve. For variable-restriction after-treatment devices, the maximum exhaust restriction is defined at the after-treatment condition (degreening/aging and regeneration/loading level) specified by the manufacturer. If the maximum restriction is 5 kPa or less, the set point shall be no less than 1.0 kPa from the maximum. The after-treatment container may be removed during dummy tests and during engine mapping, and replaced with an equivalent container having an inactive catalyst support.

The emissions measured on the test cycle shall be representative of the emissions in the field. In the case of an engine equipped with a exhaust after-treatment system that requires the consumption of a reagent, the reagent used for all tests shall be declared by the manufacturer.

For engines equipped with exhaust after-treatment systems that are regenerated on a periodic basis, as described in paragraph 6.6.2., emission results shall be adjusted to account for regeneration events. In this case, the average emission depends on the frequency of the regeneration event in terms of fraction of tests during which the regeneration occurs.

After-treatment systems with continuous regeneration in accordance with paragraph 6.6.1. do not require a special test procedure.

6.6.1. Continuous regeneration

For an exhaust after-treatment system based on a continuous regeneration process the emissions shall be measured on an after-treatment system that has been stabilized so as to result in repeatable emissions behaviour.

The regeneration process shall occur at least once during the relevant hot start duty cycle (WHTC for conventional engines, HEC or HPC for hybrid powertrains) and the manufacturer shall declare the normal conditions under which regeneration occurs (soot load, temperature, exhaust back-pressure, etc.).

In order to demonstrate that the regeneration process is continuous, at least three hot start tests shall be conducted. For the purpose of this demonstration, the engine shall be warmed up in accordance with paragraph 7.4.1., the engine be soaked in accordance with paragraph 7.6.3. and the first hot start test be run. The subsequent hot start tests shall be started after soaking in accordance with paragraph 7.6.3. During the tests, exhaust temperatures and pressures shall be recorded (temperature before and after the after-treatment system, exhaust back pressure, etc.).

The after-treatment system is considered to be of the continuous regeneration type if the conditions declared by the manufacturer occur during the test during a sufficient time and the emission results do not scatter by more than ±25 per cent for the gaseous components and by not more than ±25 per cent or 0.005 g/kWh, whichever is greater, for PM.

If the exhaust after-treatment system has a security mode that shifts to a periodic regeneration mode, it shall be checked in accordance with paragraph 6.6.2. For that specific case, the applicable emission limits may be exceeded and would not be weighted.

6.6.2. Periodic regeneration

For an exhaust after-treatment based on a periodic regeneration process, the emissions shall be measured on at least three hot start tests, one with and two without a regeneration event on a stabilized after-treatment system, and the results be weighted in accordance with equation 6.

The regeneration process shall occur at least once during the hot start test. The engine may be equipped with a switch capable of preventing or permitting the regeneration process provided this operation has no effect on the original engine calibration.

The manufacturer shall declare the normal parameter conditions under which the regeneration process occurs (soot load, temperature, exhaust back-pressure, etc.) and its duration. The manufacturer shall also provide the frequency of the regeneration event in terms of number of tests during which the regeneration occurs compared to number of tests without regeneration. The exact procedure to determine this frequency shall be based upon in use data using good engineering judgement, and shall be agreed by the type approval or certification authority.

The manufacturer shall provide an after-treatment system that has been loaded in order to achieve regeneration during a hot start test. Regeneration shall not occur during this engine-conditioning phase.

For the purpose of this testing, the engine shall be warmed up in accordance with paragraph 7.4.1., the engine be soaked in accordance with paragraph 7.6.3. and the hot start test be started.

Average brake specific emissions between regeneration phases shall be determined from the arithmetic mean of several approximately equidistant hot start test results (g/kWh). As a minimum, at least one hot start test as close as possible prior to a regeneration test and one hot start test immediately after a regeneration test shall be conducted. As an alternative, the manufacturer may provide data to show that the emissions remain constant (±25 per cent for the gaseous components and ±25 per cent or 0.005 g/kWh, whichever is greater, for PM) between regeneration phases. In this case, the emissions of only one hot start test may be used.

During the regeneration test, all the data needed to detect regeneration shall be recorded (CO or NO_x emissions, temperature before and after the after-treatment system, exhaust back pressure, etc.).

During the regeneration test, the applicable emission limits may be exceeded.

The test procedure is schematically shown in Figure 2.

Figure 2
Scheme of periodic regeneration

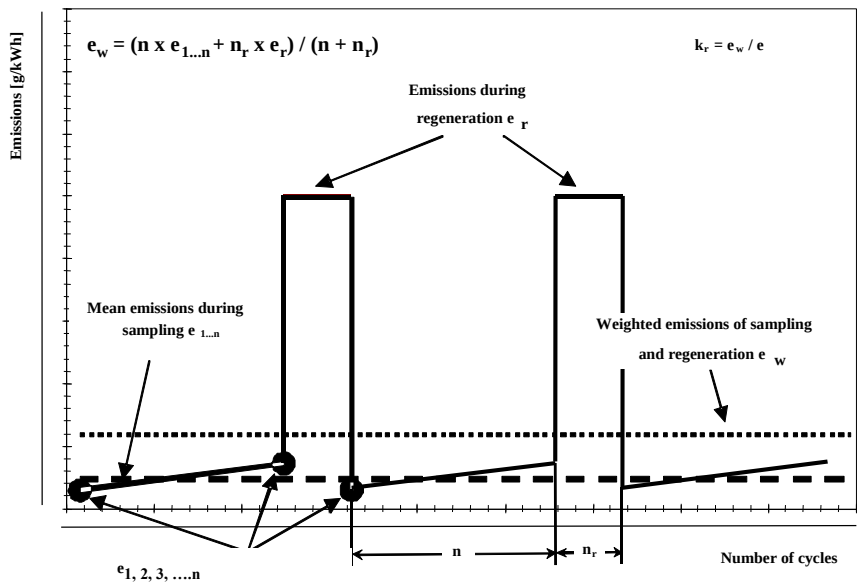

The hot start emissions shall be weighted as follows:

$$e_w = \frac{n \times \bar{e} + n_r \times \overline{e_r}}{n + n_r} \qquad (6)$$

Where:

n is the number of hot start tests without regeneration,

n_r is the number of hot start tests with regeneration (minimum one test),

$\bar{e}$ is the average specific emission without regeneration, g/kWh,

$\overline{e_r}$ is the average specific emission with regeneration, g/kWh.

For the determination of $\overline{e_r}$, the following provisions apply:

(a) If regeneration takes more than one hot start test, consecutive full hot start tests shall be conducted and emissions continued to be measured without soaking and without shutting the engine off, until regeneration is completed, and the average of the hot start tests be calculated.

(b) If regeneration is completed during any hot start test, the test shall be continued over its entire length.

In agreement with the type approval or certification authority, the regeneration adjustment factors may be applied either multiplicative (c) or additive (d) based upon good engineering analysis.

(c) The multiplicative adjustment factors shall be calculated as follows:

$$k_{r,u} = \frac{e_w}{e} \text{ (upward)} \qquad (7)$$

$$k_{r,d} = \frac{e_w}{e_r} \text{ (downward)} \qquad (8)$$

(d) The additive adjustment factors shall be calculated as follows:

$$k_{r,u} = e_w - e \text{ (upward)} \qquad (9)$$

$$k_{r,d} = e_w - e_r \text{ (downward)} \qquad (10)$$

With reference to the specific emission calculations in paragraph 8.6.3., the regeneration adjustment factors shall be applied, as follows:

(e) For a test without regeneration, $k_{r,u}$ shall be multiplied with or be added to, respectively, the specific emission e in equation 73 or 74,

(f) For a test with regeneration, $k_{r,d}$ shall be multiplied with or be subtracted from, respectively, the specific emission e in equation 73 or 74.

At the request of the manufacturer, the regeneration adjustment factors,

(g) May be extended to other members of the same engine family,

(h) May be extended to other engine families using the same after-treatment system with the prior approval of the type approval or certification authority based on technical evidence to be supplied by the manufacturer, that the emissions are similar.

6.7. Cooling system

An engine cooling system with sufficient capacity to maintain the engine at normal operating temperatures prescribed by the manufacturer shall be used.

6.8. Lubricating oil

The lubricating oil shall be specified by the manufacturer and be representative of lubricating oil available on the market; the specifications of the lubricating oil used for the test shall be recorded and presented with the results of the test.

6.9. Specification of the reference fuel

The use of one standardized reference fuel has always been considered as an ideal condition for ensuring the reproducibility of regulatory emission testing, and Contracting Parties are encouraged to use such fuel in their compliance testing. However, until performance requirements (i.e. limit values) have been introduced into this gtr, Contracting Parties to the 1998 Agreement are allowed to define their own reference fuel for their national legislation, to address the actual situation of market fuel for vehicles in use.

The appropriate diesel reference fuels of the European Union, the United States of America and Japan listed in Annex 2 are recommended to be used for testing. Since fuel characteristics influence the engine exhaust gas emission, the characteristics of the fuel used for the test shall be determined, recorded and declared with the results of the test.

The fuel temperature shall be in accordance with the manufacturer's recommendations.

6.10. Crankcase emissions

No crankcase emissions shall be discharged directly into the ambient atmosphere, with the following exception: engines equipped with turbochargers, pumps, blowers, or superchargers for air induction may discharge crankcase emissions to the ambient atmosphere if the emissions are added to the exhaust emissions (either physically or mathematically) during all emission testing. Manufacturers taking advantage of this exception shall install the engines so that all crankcase emission can be routed into the emissions sampling system.

For the purpose of this paragraph, crankcase emissions that are routed into the exhaust upstream of exhaust after-treatment during all operation are not considered to be discharged directly into the ambient atmosphere.

Open crankcase emissions shall be routed into the exhaust system for emission measurement, as follows:

(a) The tubing materials shall be smooth-walled, electrically conductive, and not reactive with crankcase emissions. Tube lengths shall be minimized as far as possible.

(b) The number of bends in the laboratory crankcase tubing shall be minimized, and the radius of any unavoidable bend shall be maximized.

(c) The laboratory crankcase exhaust tubing shall be heated, thin-walled or insulated and shall meet the engine manufacturer's specifications for crankcase back pressure.

(d) The crankcase exhaust tubing shall connect into the raw exhaust downstream of any after-treatment system, downstream of any installed exhaust restriction, and sufficiently upstream of any sample probes to ensure complete mixing with the engine's exhaust before sampling. The crankcase exhaust tube shall extend into the free stream of exhaust to avoid boundary-layer effects and to promote mixing. The crankcase exhaust tube's outlet may orient in any direction relative to the raw exhaust flow.

7. Test procedures

7.1. Principles of emissions measurement

To measure the brake-specific emissions,

(a) The engine shall be operated over the test cycles defined in paragraphs 7.2.1. and 7.2.2. for conventional engines, or

(b) The engine shall be operated over the test cycle defined in paragraph 7.2.3.1. for hybrid powertrains, or

(c) The powertrain shall be operated over the test cycle defined in paragraph 7.2.3.2. for hybrid powertrains.

The measurement of brake-specific emissions requires the determination of the mass of components in the exhaust and the corresponding engine or system (for hybrid powertrains) cycle work. The components are determined by the sampling methods described in paragraphs 7.1.1. and 7.1.2.

For hybrid vehicles, the derivation of the individual engine or powertrain test cycles is described in Annex 9 or Annex 10, respectively.

7.1.1. Continuous sampling

In continuous sampling, the component's concentration is measured continuously from raw or dilute exhaust. This concentration is multiplied by the continuous (raw or dilute) exhaust flow rate at the emission sampling location to determine the component's mass flow rate. The component's emission is continuously summed over the test cycle. This sum is the total mass of the emitted component.

7.1.2. Batch sampling

In batch sampling, a sample of raw or dilute exhaust is continuously extracted and stored for later measurement. The extracted sample shall be proportional to the raw or dilute exhaust flow rate. Examples of batch sampling are collecting diluted gaseous components in a bag and collecting Particulate Matter (PM) on a filter. The batch sampled concentrations are multiplied by the total exhaust mass or mass flow (raw or dilute) from which it was extracted during the test cycle. This product is the total mass or mass flow of the emitted component. To calculate the PM concentration, the PM deposited onto a filter from proportionally extracted exhaust shall be divided by the amount of filtered exhaust.

7.1.3. Measurement procedures

This gtr applies two measurement procedures that are functionally equivalent. Both procedures may be used for the WHTC, WHSC, HEC and HPC test cycles:

(a) The gaseous components are sampled continuously in the raw exhaust gas, and the particulates are determined using a partial flow dilution system,

(b) The gaseous components and the particulates are determined using a full flow dilution system (CVS system).

Any combination of the two principles (e.g. raw gaseous measurement and full flow particulate measurement) is permitted.

7.2. Test cycles

7.2.1. Transient test cycle WHTC

The transient test cycle WHTC is listed in Annex 1, paragraph (a) as a second-by-second sequence of normalized speed and torque values. In order to perform the test on an engine test cell, the normalized values shall be converted to the actual values for the individual engine under test based on the engine-mapping curve. The conversion is referred to as denormalization, and the test cycle so developed as the reference cycle of the engine to be tested. With that reference speed and torque values, the cycle shall be run on the test cell, and the actual speed, torque and power values shall be recorded. In order to validate the test run, a regression analysis between reference and actual speed, torque and power values shall be conducted upon completion of the test.

For calculation of the brake specific emissions, the actual cycle work shall be calculated by integrating actual engine power over the cycle. For cycle validation, the actual cycle work shall be within prescribed limits of the reference cycle work.

For the gaseous pollutants, continuous sampling (raw or dilute exhaust gas) or batch sampling (dilute exhaust gas) may be used. The particulate sample shall be diluted with a conditioned diluent (such as ambient air), and collected on a single suitable filter. The WHTC is shown schematically in Figure 3.

Figure 3
WHTC test cycle

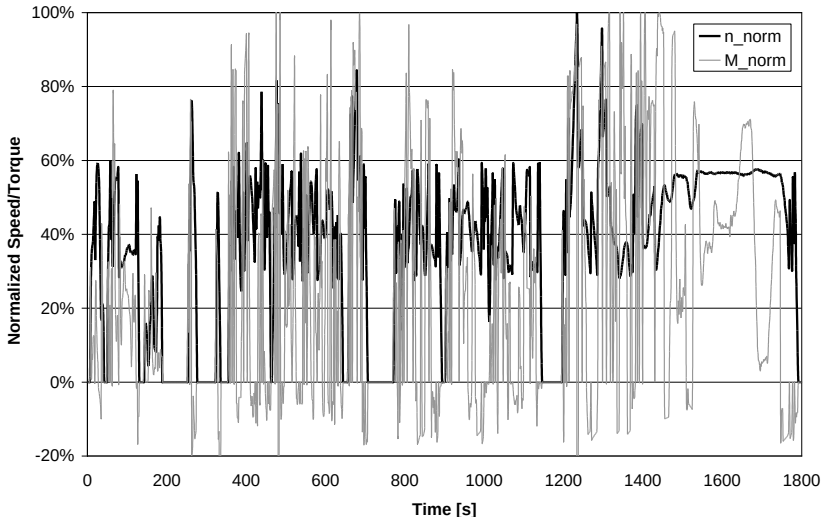

7.2.2. Ramped steady state test cycle WHSC

The ramped steady state test cycle WHSC consists of a number of normalized speed and load modes which shall be converted to the reference values for the individual engine under test based on the engine-mapping curve. The engine shall be operated for the prescribed time in each mode, whereby engine speed and load shall be changed linearly within 20 ± 1 seconds. In order to validate the test run, a regression analysis between reference and actual speed, torque and power values shall be conducted upon completion of the test.

The concentration of each gaseous pollutant, exhaust flow and power output shall be determined over the test cycle. The gaseous pollutants may be recorded continuously or sampled into a sampling bag. The particulate sample shall be diluted with a conditioned diluent (such as ambient air). One sample over the complete test procedure shall be taken, and collected on a single suitable filter.

For calculation of the brake specific emissions, the actual cycle work shall be calculated by integrating actual engine power over the cycle.

The WHSC is shown in Table 1. Except for mode 1, the start of each mode is defined as the beginning of the ramp from the previous mode.

Table 1
WHSC test cycle

Mode	*Normalized speed (per cent)*	*Normalized torque (per cent)*	*Mode length (s) incl. 20 s ramp*
1	0	0	210
2	55	100	50
3	55	25	250
4	55	70	75
5	35	100	50
6	25	25	200
7	45	70	75
8	45	25	150
9	55	50	125
10	75	100	50
11	35	50	200
12	35	25	250
13	0	0	210
Sum			1,895

7.2.3. Transient test cycle WHVC (hybrid powertrains only)

The transient test cycle WHVC is listed in Appendix 1b as a second-by-second sequence of vehicle speed and road gradients. In order to perform the test on an engine or powertrain test cell, the cycle values need to be converted to the reference values for rotational speed and torque for the individual engine or powertrain under test in accordance with either method in paragraph 7.2.3.1. or 7.2.3.2.

It should be noted that the test cycles referred to as HEC and HPC in this gtr are not standardized cycles like the WHTC and WHSC, but test cycles developed individually from the WHVC for the hybrid powertrain under test.

7.2.3.1. HILS method

The conversion is carried out in accordance with Annex 9, and the test cycle so developed is the reference cycle of the engine to be tested (HEC). With those references speed and torque values, the cycle shall be run on the test cell, and the actual speed, torque and power values shall be recorded. In order to validate the test run, a regression analysis between reference and actual speed, torque and power values shall be conducted upon completion of the test.

7.2.3.2. Powertrain method

The conversion is carried out in accordance with Annex 10, and the test cycle so developed is the reference cycle of the powertrain to be tested (HPC). The HPC is operated by using the speed set points calculated from the WHVC and on line control of the load.

7.3. General test sequence

The following flow chart outlines the general guidance that should be followed during testing. The details of each step are described in the relevant paragraphs. Deviations from the guidance are permitted where appropriate, but the specific requirements of the relevant paragraphs are mandatory.

For the WHTC, HEC and HPC, the test procedure consists of a cold start test following either natural or forced cool-down of the engine, a hot soak period and a hot start test.

For the WHSC, the test procedure consists of a hot start test following engine preconditioning at WHSC mode 9.

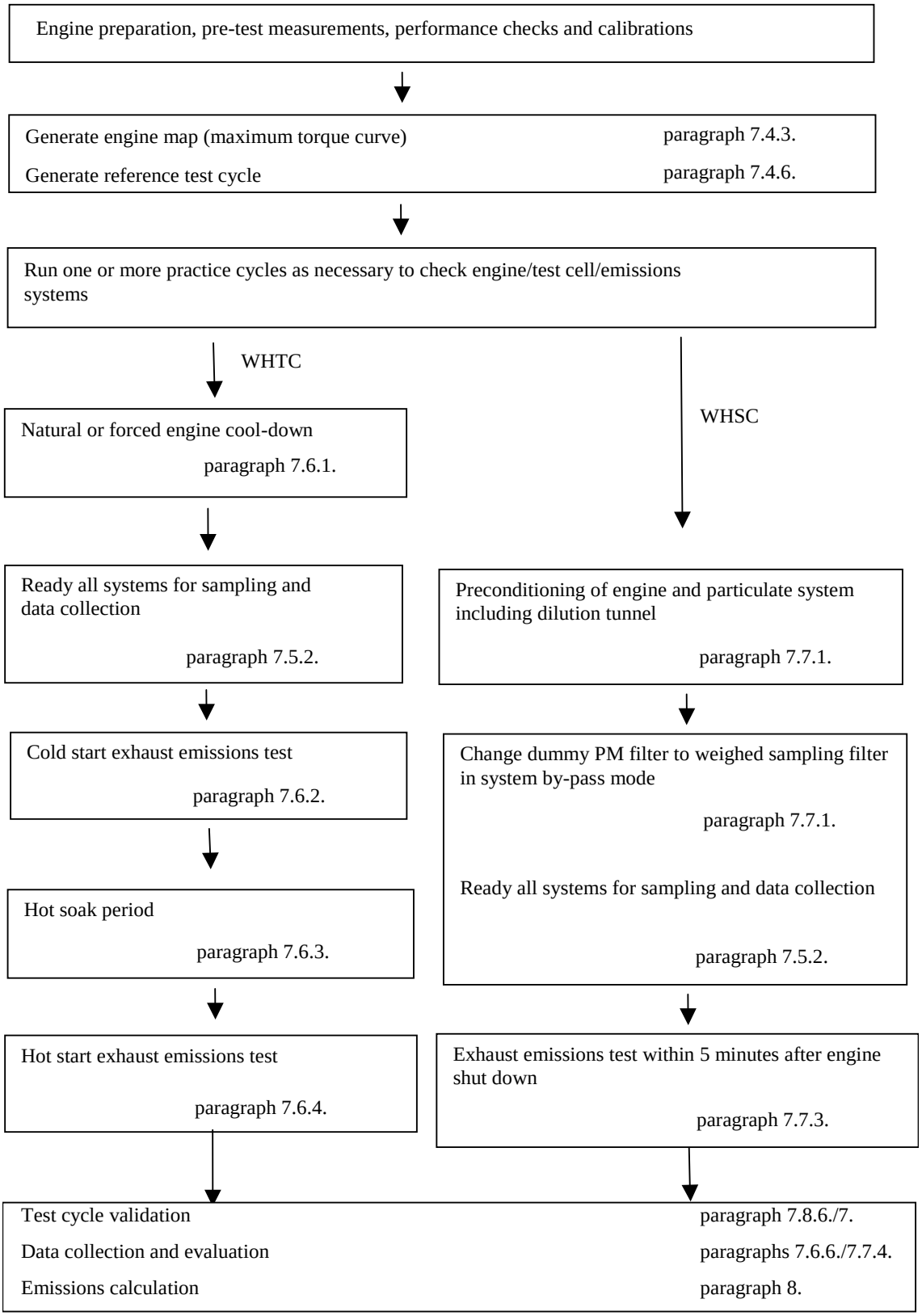
Engine preparation, pre-test measurements, performance checks and calibrations
Generate engine map (maximum torque curve)
paragraph 7.4.3.
Generate reference test cycle
paragraph 7.4.6.
Run one or more practice cycles as necessary to check engine/test cell/emissions systems
WHTC
WHSC
Natural or forced engine cool-down
paragraph 7.6.1.
Ready all systems for sampling and data collection
paragraph 7.5.2.
Preconditioning of engine and particulate system including dilution tunnel
paragraph 7.7.1.
Cold start exhaust emissions test
paragraph 7.6.2.
Change dummy PM filter to weighed sampling filter in system by-pass mode
paragraph 7.7.1.
Ready all systems for sampling and data collection
paragraph 7.5.2.
Hot soak period
paragraph 7.6.3.
Hot start exhaust emissions test
paragraph 7.6.4.
Exhaust emissions test within 5 minutes after engine shut down
paragraph 7.7.3.
Test cycle validation
paragraph 7.8.6./7.
Data collection and evaluation
paragraphs 7.6.6./7.7.4.
Emissions calculation
paragraph 8.

7.4. Engine mapping and reference cycle

Pre-test engine measurements, pre-test engine performance checks and pre-test system calibrations shall be made prior to the engine mapping procedure in line with the general test sequence shown in paragraph 7.3.

As basis for WHTC and WHSC reference cycle generation, the engine shall be mapped under full load operation for determining the speed vs. maximum torque and speed vs. maximum power curves. The mapping curve shall be used for denormalizing engine speed (paragraph 7.4.6.) and engine torque (paragraph 7.4.7.).

For hybrid vehicle powertrains, the procedures in paragraphs A.9.6.3. or A.10.4., respectively, shall be used. Paragraphs 7.4.1. to 7.4.8. do not apply.

7.4.1. Engine warm-up

The engine shall be warmed up between 75 per cent and 100 per cent of its maximum power or in accordance with the recommendation of the manufacturer and good engineering judgment. Towards the end of the warm up it shall be operated in order to stabilize the engine coolant and lube oil temperatures to within ±2 per cent of its mean values for at least 2 minutes or until the engine thermostat controls engine temperature.

7.4.2. Determination of the mapping speed range

The minimum and maximum mapping speeds are defined as follows:

Minimum mapping speed = idle speed

Maximum mapping speed = n_{hi} x 1.02 or speed where full load torque drops off to zero, whichever is smaller.

7.4.3. Engine mapping curve

When the engine is stabilized in accordance with paragraph 7.4.1., the engine mapping shall be performed in accordance with the following procedure.

(a) The engine shall be unloaded and operated at idle speed.

(b) The engine shall be operated with maximum operator demand at minimum mapping speed.

(c) The engine speed shall be increased at an average rate of 8 ± 1 min^{-1}/s from minimum to maximum mapping speed, or at a constant rate such that it takes 4 to 6 minutes to sweep from minimum to maximum mapping speed. Engine speed and torque points shall be recorded at a sample rate of at least one point per second.

When selecting option (b) in paragraph 7.4.7. for determining negative reference torque, the mapping curve may directly continue with minimum operator demand from maximum to minimum mapping speed.

7.4.4. Alternate mapping

If a manufacturer believes that the above mapping techniques are unsafe or unrepresentative for any given engine, alternate mapping techniques may be used. These alternate techniques shall satisfy the intent of the specified mapping procedures to determine the maximum available torque at all engine speeds achieved during the test cycles. Deviations from the mapping techniques specified in this paragraph for reasons of safety or representativeness shall be approved by the Type Approval or certification

Authority along with the justification for their use. In no case, however, the torque curve shall be run by descending engine speeds for governed or turbocharged engines.

7.4.5. Replicate tests

An engine need not be mapped before each and every test cycle. An engine shall be remapped prior to a test cycle if:

(a) An unreasonable amount of time has transpired since the last map, as determined by engineering judgement, or

(b) Physical changes or recalibrations have been made to the engine which potentially affect engine performance.

7.4.6. Denormalization of engine speed

For generating the reference cycles, the normalized speeds of Annex 1, paragraph (a) (WHTC) and Table 1 (WHSC) shall be denormalized using the following equation:

$$n_{ref} = n_{norm} \text{ x } (0.45 \text{ x } n_{lo} + 0.45 \text{ x } n_{pref} + 0.1 \text{ x } n_{hi} - n_{idle}) \text{ x } 2.0327 + n_{idle} \qquad (11)$$

For determination of n_{pref}, the integral of the maximum torque shall be calculated from n_{idle} to n_{95h} from the engine mapping curve, as determined in accordance with paragraph 7.4.3.

The engine speeds in Figures 4 and 5 are defined, as follows:

n_{lo} is the lowest speed where the power is 55 per cent of maximum power

n_{pref} is the engine speed where the integral of maximum mapped torque is 51 per cent of the whole integral between n_{idle} and n_{95h}

n_{hi} is the highest speed where the power is 70 per cent of maximum power

n_{idle} is the idle speed

n_{95h} is the highest speed where the power is 95 per cent of maximum power

For engines (mainly positive ignition engines) with a steep governor droop curve, where fuel cut off does not permit to operate the engine up to n_{hi} or n_{95h}, the following provisions apply:

n_{hi} in equation 11 is replaced with n_{Pmax} x 1.02

n_{95h} is replaced with n_{Pmax} x 1.02

Figure 4
Definition of test speeds

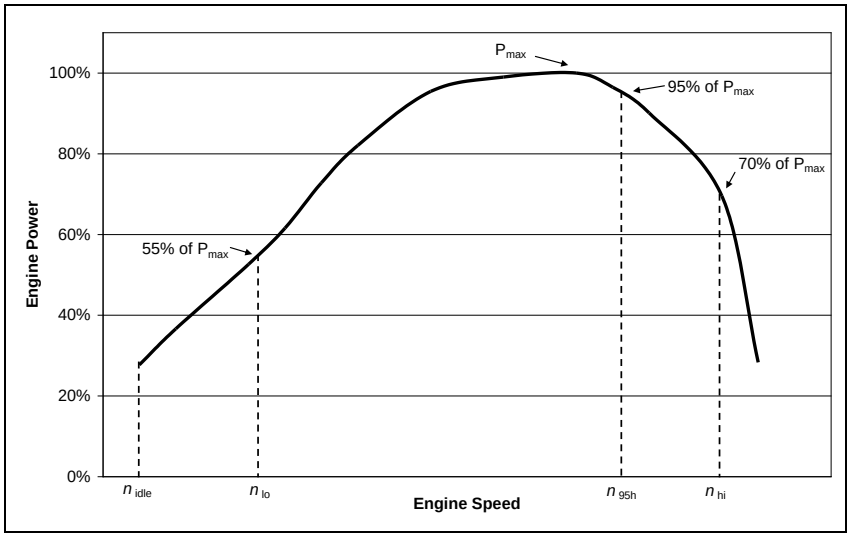

Figure 5
Definition of n_{pref}

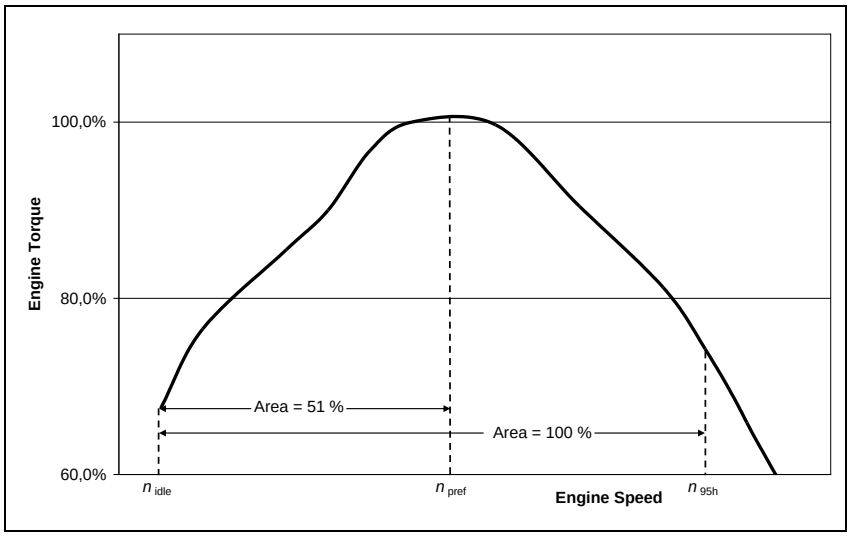

7.4.7. Denormalization of engine torque

The torque values in the engine dynamometer schedule of Annex 1, paragraph (a) (WHTC) and in Table 1 (WHSC) are normalized to the maximum torque at the respective speed. For generating the reference cycles, the torque values for each individual reference speed value as determined in paragraph 7.4.6. shall be denormalized, using the mapping curve determined in accordance with paragraph 7.4.3., as follows:

$$M_{\mathrm{ref,i}} = \frac{M_{\mathrm{norm,i}}}{100} \times M_{\mathrm{max,i}} + M_{\mathrm{f,i}} - M_{\mathrm{r,i}} \qquad (12)$$

Where:

$M_{\mathrm{norm,i}}$ is the normalized torque, per cent

$M_{max,i}$ is the maximum torque from the mapping curve, Nm

$M_{f,i}$ is the torque absorbed by auxiliaries/equipment to be fitted, Nm

$M_{r,i}$ is the torque absorbed by auxiliaries/equipment to be removed, Nm

If auxiliaries/equipment are fitted in accordance with paragraph 6.3.1. and Annex 7, M_f and M_r are zero.

The negative torque values of the motoring points (m in Annex 1, paragraph (a)) shall take on, for purposes of reference cycle generation, reference values determined in either of the following ways:

(a) Negative 40 per cent of the positive torque available at the associated speed point,

(b) Mapping of the negative torque required to motor the engine from maximum to minimum mapping speed,

(c) Determination of the negative torque required to motor the engine at idle and at n_{hi} and linear interpolation between these two points.

7.4.8. Calculation of reference cycle work

Reference cycle work shall be determined over the test cycle by synchronously calculating instantaneous values for engine power from reference speed and reference torque, as determined in paragraphs 7.4.6. and 7.4.7. Instantaneous engine power values shall be integrated over the test cycle to calculate the reference cycle work W_{ref} (kWh). If auxiliaries are not fitted in accordance with paragraph 6.3.1., the instantaneous power values shall be corrected using equation 5 in paragraph 6.3.5.

The same methodology shall be used for integrating both reference and actual engine power. If values are to be determined between adjacent reference or adjacent measured values, linear interpolation shall be used. In integrating the actual cycle work, any negative torque values shall be set equal to zero and included. If integration is performed at a frequency of less than 5 Hz, and if, during a given time segment, the torque value changes from positive to negative or negative to positive, the negative portion shall be computed and set equal to zero. The positive portion shall be included in the integrated value.

7.5. Pre-test procedures

7.5.1. Installation of the measurement equipment

The instrumentation and sample probes shall be installed as required. The tailpipe shall be connected to the full flow dilution system, if used.

7.5.2. Preparation of measurement equipment for sampling

The following steps shall be taken before emission sampling begins:

(a) Leak checks shall be performed within 8 hours prior to emission sampling in accordance with paragraph 9.3.4.

(b) For batch sampling, clean storage media shall be connected, such as evacuated bags.

(c) All measurement instruments shall be started in accordance with the instrument manufacturer's instructions and good engineering judgment.

(d) Dilution systems, sample pumps, cooling fans, and the data-collection system shall be started.

(e) The sample flow rates shall be adjusted to desired levels, using bypass flow, if desired.

(f) Heat exchangers in the sampling system shall be pre-heated or pre-cooled to within their operating temperature ranges for a test.

(g) Heated or cooled components such as sample lines, filters, coolers, and pumps shall be allowed to stabilize at their operating temperatures.

(h) Exhaust dilution system flow shall be switched on at least 10 minutes before a test sequence.

(i) Any electronic integrating devices shall be zeroed or re-zeroed, before the start of any test interval.

7.5.3. Checking the gas analyzers

Gas analyzer ranges shall be selected. Emission analyzers with automatic or manual range switching are permitted. During the test cycle, the range of the emission analyzers shall not be switched. At the same time the gains of an analyzer's analogue operational amplifier(s) may not be switched during the test cycle.

Zero and span response shall be determined for all analyzers using internationally-traceable gases that meet the specifications of paragraph 9.3.3. FID analyzers shall be spanned on a carbon number basis of one (C1).

7.5.4. Preparation of the particulate sampling filter

At least one hour before the test, the filter shall be placed in a petri dish, which is protected against dust contamination and allows air exchange, and placed in a weighing chamber for stabilization. At the end of the stabilization period, the filter shall be weighed and the tare weight shall be recorded. The filter shall then be stored in a closed petri dish or sealed filter holder until needed for testing. The filter shall be used within eight hours of its removal from the weighing chamber.

7.5.5. Adjustment of the dilution system

The total diluted exhaust gas flow of a full flow dilution system or the diluted exhaust gas flow through a partial flow dilution system shall be set to eliminate water condensation in the system, and to obtain a filter face temperature between 315 K (42 °C) and 325 K (52 °C).

7.5.6. Starting the particulate sampling system

The particulate sampling system shall be started and operated on by-pass. The particulate background level of the diluent may be determined by sampling the diluent prior to the entrance of the exhaust gas into the dilution tunnel. The measurement may be done prior to or after the test. If the measurement is done both at the beginning and at the end of the cycle, the values may be averaged. If a different sampling system is used for background measurement, the measurement shall be done in parallel to the test run.

7.6. WHTC cycle run

This paragraph also applies to the HEC and HPC duty cycles of hybrid vehicles. Different cycles for the cold start and hot start are permitted, if it is the result of the conversion procedure in Annex 9 or Annex 10.

7.6.1. Engine cool-down

A natural or forced cool-down procedure may be applied. For forced cool-down, good engineering judgment shall be used to set up systems to send cooling air across the engine, to send cool oil through the engine lubrication system, to remove heat from the coolant through the engine cooling system, and to remove heat from an exhaust after-treatment system. In the case of a forced after-treatment system cool down, cooling air shall not be applied until the after-treatment system has cooled below its catalytic activation temperature. Any cooling procedure that results in unrepresentative emissions is not permitted.

7.6.2. Cold start test

The cold-start test shall be started when the temperatures of the engine's lubricant, coolant, and after-treatment systems are all between 293 and 303 K (20 and 30 °C). The engine shall be started using one of the following methods:

(a) The engine shall be started as recommended in the owner's manual using a production starter motor and adequately charged battery or a suitable power supply; or

(b) The engine shall be started by using the dynamometer. The engine shall be motored within ±25 per cent of its typical in-use cranking speed. Cranking shall be stopped within 1 second after the engine is running. If the engine does not start after 15 seconds of cranking, cranking shall be stopped and the reason for the failure to start determined, unless the owner's manual or the service-repair manual describes the longer cranking time as normal.

7.6.3. Hot soak period

Immediately upon completion of the cold start test, the engine shall be conditioned for the hot start test using a 10 ± 1 minutes hot soak period.

7.6.4. Hot start test

The engine shall be started at the end of the hot soak period as defined in paragraph 7.6.3. using the starting methods given in paragraph 7.6.2.

7.6.5. Test sequence

The test sequence of both cold start and hot start test shall commence at the start of the engine. After the engine is running, cycle control shall be initiated so that engine operation matches the first set point of the cycle.

The WHTC shall be performed in accordance with the reference cycle as set out in paragraphs 7.4.6. and 7.4.7. Engine speed and torque command set points shall be issued at 5 Hz (10 Hz recommended) or greater. The set points shall be calculated by linear interpolation between the 1 Hz set points of the reference cycle. Actual engine speed and torque shall be recorded at least once every second during the test cycle (1 Hz), and the signals may be electronically filtered.

The HEC and HPC shall be performed in accordance with the reference cycles in paragraphs A.9.2.4. or A.10.5., respectively.

7.6.5.1. Stop/start system

If a stop/start system is used or if the hybrid cycle requires an engine stop, the engine may be turned off at idle and/or motoring points, as commanded by the engine ECU. Emissions measurement and data collection shall continue until the end of test cycle.

7.6.6. Collection of emission relevant data

At the start of the test sequence, the measuring equipment shall be started, simultaneously:

(a) Start collecting or analyzing diluent, if a full flow dilution system is used;

(b) Start collecting or analyzing raw or diluted exhaust gas, depending on the method used;

(c) Start measuring the amount of diluted exhaust gas and the required temperatures and pressures;

(d) Start recording the exhaust gas mass flow rate, if raw exhaust gas analysis is used;

(e) Start recording the feedback data of speed and torque of the dynamometer.

If raw exhaust measurement is used, the emission concentrations ((NM)HC, CO and NO_x) and the exhaust gas mass flow rate shall be measured continuously and stored with at least 2 Hz on a computer system. All other data may be recorded with a sample rate of at least 1 Hz. For analogue analyzers the response shall be recorded, and the calibration data may be applied online or offline during the data evaluation.

If a full flow dilution system is used, HC and NO_x shall be measured continuously in the dilution tunnel with a frequency of at least 2 Hz. The average concentrations shall be determined by integrating the analyzer signals over the test cycle. The system response time shall be no greater than 20 s, and shall be coordinated with CVS flow fluctuations and sampling time/test cycle offsets, if necessary. CO, CO_2, and NMHC may be determined by integration of continuous measurement signals or by analyzing the concentrations in the sample bag, collected over the cycle. The concentrations of the gaseous pollutants in the diluent shall be determined prior to the point where the exhaust enters into the dilution tunnel by integration or by collecting into the background bag. All other parameters that need to be measured shall be recorded with a minimum of one measurement per second (1 Hz).

7.6.7. Particulate sampling

At the start of the test sequence, the particulate sampling system shall be switched from by-pass to collecting particulates.

If a partial flow dilution system is used, the sample pump(s) shall be controlled, so that the flow rate through the particulate sample probe or transfer tube is maintained proportional to the exhaust mass flow rate as determined in accordance with paragraph 9.4.6.1.

If a full flow dilution system is used, the sample pump(s) shall be adjusted so that the flow rate through the particulate sample probe or transfer tube is maintained at a value within ±2.5 per cent of the set flow rate. If flow compensation (i.e., proportional control of sample flow) is used, it shall be demonstrated that the ratio of main tunnel flow to particulate sample flow does not change by more than ±2.5 per cent of its set value (except for the first 10 seconds of sampling). The average temperature and pressure at the gas meter(s) or flow instrumentation inlet shall be recorded. If the set flow rate cannot be maintained over the complete cycle within ±2.5 per cent because of high particulate loading on the filter, the test shall be voided. The test shall be rerun using a lower sample flow rate.

7.6.8. Engine stalling and equipment malfunction

If the engine stalls anywhere during the cold start test, except in case of an engine stop commanded by the ECU in accordance with paragraph 7.6.5.1., the test shall be voided. The engine shall be preconditioned and restarted in accordance with the requirements of paragraph 7.6.2., and the test repeated.

If the engine stalls anywhere during the hot start test, except in case of an engine stop commanded by the ECU in accordance with paragraph 7.6.5.1., the hot start test shall be voided. The engine shall be soaked in accordance with paragraph 7.6.3., and the hot start test repeated. In this case, the cold start test need not be repeated.

If a malfunction occurs in any of the required test equipment during the test cycle, the test shall be voided and repeated in line with the above provisions.

7.7. WHSC cycle run

This paragraph does not apply to hybrid vehicles.

7.7.1. Preconditioning the dilution system and the engine

The dilution system and the engine shall be started and warmed up in accordance with paragraph 7.4.1. After warm-up, the engine and sampling system shall be preconditioned by operating the engine at mode 9 (see paragraph 7.2.2., Table 1) for a minimum of 10 minutes while simultaneously operating the dilution system. Dummy particulate emissions samples may be collected. Those sample filters need not be stabilized or weighed, and may be discarded. Flow rates shall be set at the approximate flow rates selected for testing. The engine shall be shut off after preconditioning.

7.7.2. Engine starting

5 ± 1 minutes after completion of preconditioning at mode 9 as described in paragraph 7.7.1., the engine shall be started in accordance with the manufacturer's recommended starting procedure in the owner's manual, using either a production starter motor or the dynamometer in accordance with paragraph 7.6.2.

7.7.3. Test sequence

The test sequence shall commence after the engine is running and within one minute after engine operation is controlled to match the first mode of the cycle (idle).

The WHSC shall be performed in accordance with the order of test modes listed in Table 1 of paragraph 7.2.2.

7.7.4. Collection of emission relevant data

At the start of the test sequence, the measuring equipment shall be started, simultaneously:

(a) Start collecting or analyzing diluent, if a full flow dilution system is used;

(b) Start collecting or analyzing raw or diluted exhaust gas, depending on the method used;

(c) Start measuring the amount of diluted exhaust gas and the required temperatures and pressures;

(d) Start recording the exhaust gas mass flow rate, if raw exhaust gas analysis is used;

(e) Start recording the feedback data of speed and torque of the dynamometer.

If raw exhaust measurement is used, the emission concentrations ((NM)HC, CO and NO_x) and the exhaust gas mass flow rate shall be measured continuously and stored with at least 2 Hz on a computer system. All other data may be recorded with a sample rate of at least 1 Hz. For analogue analyzers the response shall be recorded, and the calibration data may be applied online or offline during the data evaluation.

If a full flow dilution system is used, HC and NO_x shall be measured continuously in the dilution tunnel with a frequency of at least 2 Hz. The average concentrations shall be determined by integrating the analyzer signals over the test cycle. The system response time shall be no greater than 20 s, and shall be coordinated with CVS flow fluctuations and sampling time/test cycle offsets, if necessary. CO, CO_2, and NMHC may be determined by integration of continuous measurement signals or by analyzing the concentrations in the sample bag, collected over the cycle. The concentrations of the gaseous pollutants in the diluent shall be determined by integration or by collecting into the background bag. All other parameters that need to be measured shall be recorded with a minimum of one measurement per second (1 Hz).

7.7.5. Particulate sampling

At the start of the test sequence, the particulate sampling system shall be switched from by-pass to collecting particulates. If a partial flow dilution system is used, the sample pump(s) shall be controlled, so that the flow rate through the particulate sample probe or transfer tube is maintained proportional to the exhaust mass flow rate as determined in accordance with paragraph 9.4.6.1.

If a full flow dilution system is used, the sample pump(s) shall be adjusted so that the flow rate through the particulate sample probe or transfer tube is maintained at a value within ±2.5 per cent of the set flow rate. If flow compensation (i.e., proportional control of sample flow) is used, it shall be demonstrated that the ratio of main tunnel flow to particulate sample flow does not change by more than ±2.5 per cent of its set value (except for the first 10 seconds of sampling). The average temperature and pressure at the gas meter(s) or flow instrumentation inlet shall be recorded. If the set flow rate cannot be maintained over the complete cycle within ±2.5 per cent because of high particulate loading on the filter, the test shall be voided. The test shall be rerun using a lower sample flow rate.

7.7.6. Engine stalling and equipment malfunction

If the engine stalls anywhere during the cycle, the test shall be voided. The engine shall be preconditioned in accordance with paragraph 7.7.1. and restarted in accordance with paragraph 7.7.2., and the test repeated.

If a malfunction occurs in any of the required test equipment during the test cycle, the test shall be voided and repeated in line with the above provisions.

7.8. Post-test procedures

7.8.1. Operations after test

At the completion of the test, the measurement of the exhaust gas mass flow rate, the diluted exhaust gas volume, the gas flow into the collecting bags and the particulate sample pump shall be stopped. For an integrating analyzer system, sampling shall continue until system response times have elapsed.

7.8.2. Verification of proportional sampling

For any proportional batch sample, such as a bag sample or PM sample, it shall be verified that proportional sampling was maintained in accordance with paragraphs 7.6.7. and 7.7.5. Any sample that does not fulfil the requirements shall be voided.

7.8.3. PM conditioning and weighing

The particulate filter shall be placed into covered or sealed containers or the filter holders shall be closed, in order to protect the sample filters against ambient contamination. Thus protected, the filter shall be returned to the weighing chamber. The filter shall be conditioned for at least one hour, and then weighed in accordance with paragraph 9.4.5. The gross weight of the filter shall be recorded.

7.8.4. Drift verification

As soon as practical but no later than 30 minutes after the test cycle is complete or during the soak period, the zero and span responses of the gaseous analyzer ranges used shall be determined. For the purpose of this paragraph, test cycle is defined as follows:

(a) For the WHTC, HEC, HPC: the complete sequence cold - soak – hot;

(b) For the WHTC, HEC, HPC hot start test (paragraph 6.6.): the sequence soak – hot;

(c) For the multiple regeneration WHTC, HEC, HPC hot start test (paragraph 6.6.): the total number of hot start tests;

(d) For the WHSC: the test cycle.

The following provisions apply for analyzer drift:

(e) The pre-test zero and span and post-test zero and span responses may be directly directly inserted into equation 68 of paragraph 8.6.1. without determining drift;

(f) If the drift difference between the pre-test and post-test results is less than 1 per cent of full scale, the measured concentrations may be used uncorrected or may be corrected for drift in accordance with paragraph 8.6.1.;

(g) If the drift difference between the pre-test and post-test results is equal to or greater than 1 per cent of full scale, the test shall be voided or the measured concentrations shall be corrected for drift in accordance with paragraph 8.6.1.

7.8.5. Analysis of gaseous bag sampling

As soon as practical, the following shall be performed:

(a) Gaseous bag samples shall be analyzed no later than 30 minutes after the hot start test is complete or during the soak period for the cold start test.

(b) Background samples shall be analyzed no later than 60 minutes after the hot start test is complete.

7.8.6. Calculation of cycle work

Before calculating actual cycle work, any points recorded during engine starting shall be omitted. Actual cycle work shall be determined over the test cycle by synchronously using actual speed and actual torque values to calculate instantaneous values for engine power. Instantaneous engine power values shall be integrated over the test cycle to calculate the actual cycle work W_{act} (kWh). If auxiliaries/equipment are not fitted in accordance with paragraph 6.3.1., the instantaneous power values shall be corrected using equation 5 in paragraph 6.3.5.

The same methodology as described in paragraph 7.4.8. shall be used for integrating actual engine power.

7.8.7. Validation of cycle work

The actual cycle work W_{act} is used for comparison to the reference cycle work W_{ref} and for calculating the brake specific emissions (see paragraph 8.6.3.).

W_{act} shall be between 85 per cent and 105 per cent of W_{ref}.

This section does not apply to engines used in hybrid vehicles or to hybrid powertrains.

7.8.8. Validation statistics of the test cycle

Linear regressions of the actual values (n_{act}, M_{act}, P_{act}) on the reference values (n_{ref}, M_{ref}, P_{ref}) shall be performed for the WHTC, WHSC and HEC.

To minimize the biasing effect of the time lag between the actual and reference cycle values, the entire engine speed and torque actual signal sequence may be advanced or delayed in time with respect to the reference speed and torque sequence. If the actual signals are shifted, both speed and torque shall be shifted the same amount in the same direction.

The method of least squares shall be used, with the best-fit equation having the form:

$$y = a_1 x + a_0 \qquad (13)$$

Where:

y = actual value of speed (min^{-1}), torque (Nm), or power (kW)

a_1 = slope of the regression line

x = reference value of speed (min^{-1}), torque (Nm), or power (kW)

a_0 = y intercept of the regression line

The Standard Error of Estimate (SEE) of y on x and the coefficient of determination (r^2) shall be calculated for each regression line.

This analysis shall be performed at 1 Hz or greater. For a test to be considered valid, the criteria of Table 2 (WHTC, HEC) or Table 3 (WHSC) shall be met.

Table 2
Regression line tolerances for the WHTC and HEC

	Speed	*Torque*	*Power*
Standard Error of Estimate (SEE) of y on x	maximum 5 per cent of maximum test speed	maximum 10 per cent of maximum engine torque	maximum 10 per cent of maximum engine power
Slope of the regression line, a_1	0.95 to 1.03	0.83 - 1.03	0.89 - 1.03
Coefficient of determination, r^2	minimum 0.970	minimum 0.850	minimum 0.910
y intercept of the regression line, a_0	maximum 10 per cent of idle speed	±20 Nm or ±2 per cent of maximum torque whichever is greater	±4 kW or ±2 per cent of maximum power whichever is greater

Table 3
Regression line tolerances for the WHSC

	Speed	*Torque*	*Power*
Standard Error of Estimate (SEE) of y on x	maximum 1 per cent of maximum test speed	maximum 2 per cent of maximum engine torque	maximum 2 per cent of maximum engine power
Slope of the regression line, a_1	0.99 to 1.01	0.98 - 1.02	0.98 - 1.02
Coefficient of determination, r^2	minimum 0.990	minimum 0.950	minimum 0.950
y intercept of the regression line, a_0	maximum 1 per cent of maximum test speed	±20 Nm or ±2 per cent of maximum torque whichever is greater	±4 kW or ±2 per cent of maximum power whichever is greater

For regression purposes only, point omissions are permitted where noted in Table 4 before doing the regression calculation. However, those points shall not be omitted for the calculation of cycle work and emissions. Point omission may be applied to the whole or to any part of the cycle.

Table 4
Permitted point omissions from regression analysis

Event	*Conditions*	*Permitted point omissions*
Minimum operator demand (idle point)	n_{ref} = 0 per cent and M_{ref} = 0 per cent and $M_{act} > (M_{ref} - 0.02\ M_{max.\ mapped\ torque})$ and $M_{act} < (M_{ref} + 0.02\ M_{max.\ mapped\ torque})$	speed and power
Minimum operator demand (motoring point)	$M_{ref} < 0$ per cent	power and torque
Minimum operator demand	$n_{act} \leq 1.02\ n_{ref}$ and $M_{act} > M_{ref}$ and $n_{act} > n_{ref}$ and $M_{act} \leq M_{ref}$, and $n_{act} > 1.02\ n_{ref}$ and $M_{ref} < M_{act} \leq (M_{ref} + 0.02\ M_{max.\ mapped\ torque})$	power and either torque or speed
Maximum operator demand	$n_{act} < n_{ref}$ and $M_{act} \geq M_{ref}$ and $n_{act} \geq 0.98\ n_{ref}$ and $M_{act} < M_{ref}$ and $n_{act} < 0.98\ n_{ref}$ and $M_{ref} > M_{act} \geq (M_{ref} - 0.02\ M_{max.\ mapped\ torque})$	power and either torque or speed

8. Emission calculation

The final test result shall be rounded in one step to the number of places to the right of the decimal point indicated by the applicable emission standard plus one additional significant figure, in accordance with ASTM E 29-06B. No rounding of intermediate values leading to the final break-specific emission result is permitted.

Examples of the calculation procedures are given in Annex 6.

Emissions calculation on a molar basis in accordance with Annex 7 of gtr No. 11 (Non-Road Mobile Machinery), is permitted with the prior agreement of the Type Approval or certification Authority.

8.1. Dry/wet correction

If the emissions are measured on a dry basis, the measured concentration shall be converted to a wet basis in accordance with the following equation:

$$c_w = k_w \times c_d \qquad (14)$$

Where:

c_d is the dry concentration in ppm or per cent volume

k_w is the dry/wet correction factor

8.1.1. Raw exhaust gas

$$k_{\mathrm{w,a}} = \left(1 - \frac{1.2442 \times H_{\mathrm{a}} + 111.19 \times w_{\mathrm{ALF}} \times \frac{q_{mf,\mathrm{i}}}{q_{mad,\mathrm{i}}}}{773.4 + 1.2442 \times H_{\mathrm{a}} + \frac{q_{mf,\mathrm{i}}}{q_{mad,\mathrm{i}}} \times k_{\mathrm{f}} \times 1{,}000}\right) \times 1.008 \qquad (15)$$

Or

$$k_{\mathrm{w,a}} = \left(1 - \frac{1.2442 \times H_{\mathrm{a}} + 111.19 \times w_{\mathrm{ALF}} \times \frac{q_{mf,\mathrm{i}}}{q_{mad,\mathrm{i}}}}{773.4 + 1.2442 \times H_{\mathrm{a}} + \frac{q_{mf,\mathrm{i}}}{q_{mad,\mathrm{i}}} \times k_{\mathrm{f}} \times 1{,}000}\right) \Big/ \left(1 - \frac{p_{\mathrm{r}}}{p_{\mathrm{b}}}\right) \qquad (16)$$

Or

$$k_{\mathrm{w,a}} = \left(\frac{1}{1 + \alpha \times 0.005 \times \left(c_{\mathrm{CO2}} + c_{\mathrm{CO}}\right)} - k_{\mathrm{w1}}\right) \times 1.008 \qquad (17)$$

With

$$k_{\mathrm{fw}} = 0.055594 \text{ x } w_{\mathrm{ALF}} + 0.0080021 \text{ x } w_{\mathrm{DEL}} + 0.0070046 \text{ x } w_{\mathrm{EPS}} \qquad (18)$$

And

$$k_{\mathrm{w1}} = \frac{1.608 \times H_{\mathrm{a}}}{1{,}000 + \left(1.608 \times H_{\mathrm{a}}\right)} \qquad (19)$$

Where:

H_{a} is the intake air humidity, g water per kg dry air

w_{ALF} is the hydrogen content of the fuel, per cent mass

$q_{\mathrm{mf,i}}$ is the instantaneous fuel mass flow rate, kg/s

$q_{\mathrm{mad,I}}$ is the instantaneous dry intake air mass flow rate, kg/s

p_{r} is the water vapour pressure after cooling bath, kPa

p_{b} is the total atmospheric pressure, kPa

w_{DEL} is the nitrogen content of the fuel, per cent mass

w_{EPS} is the oxygen content of the fuel, per cent mass

α is the molar hydrogen ratio of the fuel

c_{CO2} is the dry CO_2 concentration, per cent

c_{CO} is the dry CO concentration, per cent

Equations 15 and 16 are principally identical with the factor 1.008 in equations 15 and 17 being an approximation for the more accurate denominator in equation 16.

8.1.2. Diluted exhaust gas

$$k_{w,e} = \left[\left(1 - \frac{\alpha \times c_{\mathrm{CO2w}}}{200}\right) - k_{w2}\right] \times 1.008 \qquad (20)$$

Or

$$k_{w,e} = \left[\left(\frac{(1-k_{w2})}{1 + \frac{\alpha \times c_{\mathrm{CO2d}}}{200}} \right) \right] \times 1.008 \qquad (21)$$

With

$$k_{w2} = \frac{1.608 \times \left[H_d \times \left(1 - \frac{1}{D}\right) + H_a \times \left(\frac{1}{D}\right) \right]}{1{,}000 + \left\{ 1.608 \times \left[H_d \times \left(1 - \frac{1}{D}\right) + H_a \times \left(\frac{1}{D}\right) \right] \right\}} \qquad (22)$$

Where:

α is the molar hydrogen ratio of the fuel

c_{CO2w} is the wet CO_2 concentration, per cent

c_{CO2d} is the dry CO_2 concentration, per cent

H_{d} is the diluent humidity, g water per kg dry air

H_{a} is the intake air humidity, g water per kg dry air

D is the dilution factor (see paragraph 8.5.2.3.2.)

8.1.3. Diluent

$$k_{w,d} = (1 - k_{w3}) \times 1.008 \qquad (23)$$

With

$$k_{w3} = \frac{1.608 \times H_{\mathrm{d}}}{1{,}000 + (1.608 \times H_{\mathrm{d}})} \qquad (24)$$

Where:

H_{d} is the diluent humidity, g water per kg dry air

8.2. NO_x correction for humidity

As the NO_x emission depends on ambient air conditions, the NO_x concentration shall be corrected for humidity with the factors given in paragraph 8.2.1. or 8.2.2. The intake air humidity H_{a} may be derived from relative humidity measurement, dew point measurement, vapour pressure measurement or dry/wet bulb measurement using generally accepted equations.

8.2.1. Compression-ignition engines

$$k_{\mathrm{h,D}} = \frac{15.698 \times H_a}{1{,}000} + 0.832 \qquad (25)$$

Where:

H_{a} is the intake air humidity, g water per kg dry air

8.2.2. Positive ignition engines

$$k_{\mathrm{h.G}} = 0.6272 + 44.030 \times 10^{-3} \times H_{\mathrm{a}} - 0.862 \times 10^{-3} \times H_{\mathrm{a}}^2 \qquad (26)$$

Where:

H_a is the intake air humidity, g water per kg dry air

8.3. Particulate filter buoyancy correction

The sampling filter mass shall be corrected for its buoyancy in air. The buoyancy correction depends on sampling filter density, air density and the density of the balance calibration weight, and does not account for the buoyancy of the PM itself. The buoyancy correction shall be applied to both tare filter mass and gross filter mass.

If the density of the filter material is not known, the following densities shall be used:

(a) Teflon coated glass fiber filter: 2,300 kg/m^3

(b) Teflon membrane filter: 2,144 kg/m^3

(c) Teflon membrane filter with polymethylpentene support ring: 920 kg/m^3

For stainless steel calibration weights, a density of 8,000 kg/m^3 shall be used. If the material of the calibration weight is different, its density shall be known.

The following equation shall be used:

$$m_f = m_{uncor} \times \left(\frac{1 - \frac{\rho_a}{\rho_w}}{1 - \frac{\rho_a}{\rho_f}} \right) \quad (27)$$

With

$$\rho_a = \frac{p_b \times 28.836}{8.3144 \times T_a} \quad (28)$$

Where:

m_{uncor} is the uncorrected particulate filter mass, mg

ρa is the density of the air, kg/m^3

ρw is the density of balance calibration weight, kg/m^3

ρf is the density of the particulate sampling filter, kg/m^3

pb is the total atmospheric pressure, kPa

Ta is the air temperature in the balance environment, K

28.836 is the molar mass of the air at reference humidity (282.5 K), g/mol

8.3144 is the molar gas constant

The particulate sample mass m_p used in paragraphs 8.4.3. and 8.5.3. shall be calculated as follows:

$$m_p = m_{f,G} - m_{f,T} \quad (29)$$

Where:

$m_{f,G}$ is the buoyancy corrected gross particulate filter mass, mg

$m_{f,T}$ is the buoyancy corrected tare particulate filter mass, mg

8.4. Partial flow dilution (PFS) and raw gaseous measurement

The instantaneous concentration signals of the gaseous components are used for the calculation of the mass emissions by multiplication with the instantaneous exhaust mass flow rate. The exhaust mass flow rate may be measured directly, or calculated using the methods of intake air and fuel flow measurement, tracer method or intake air and air/fuel ratio measurement. Special attention shall be paid to the response times of the different instruments. These differences shall be accounted for by time aligning the signals. For particulates, the exhaust mass flow rate signals are used for controlling the partial flow dilution system to take a sample proportional to the exhaust mass flow rate. The quality of proportionality shall be checked by applying a regression analysis between sample and exhaust flow in accordance with paragraph 9.4.6.1. The complete test set up is schematically shown in Figure 6.

Figure 6
Scheme of raw/partial flow measurement system

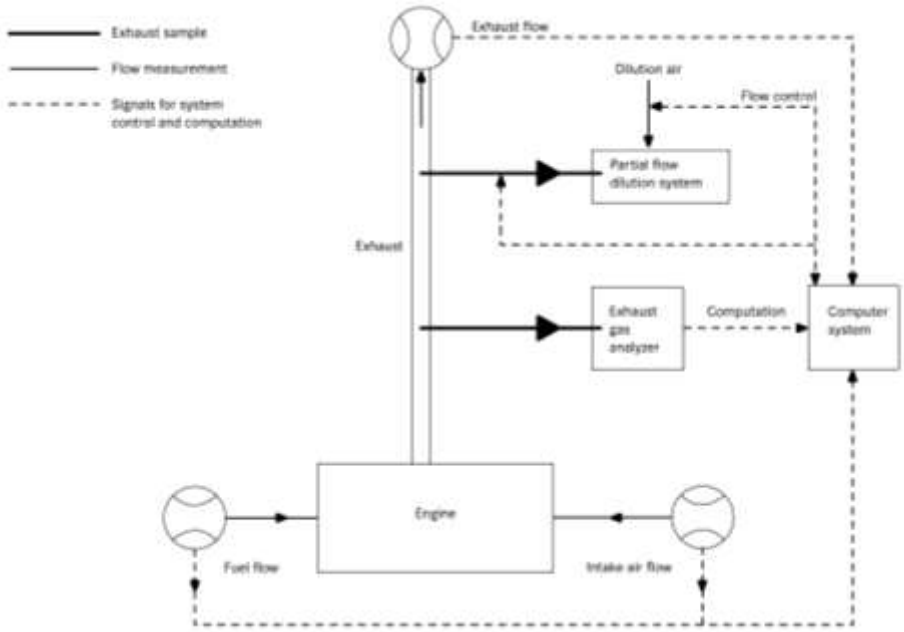

8.4.1. Determination of exhaust gas mass flow

8.4.1.1. Introduction

For calculation of the emissions in the raw exhaust gas and for controlling of a partial flow dilution system, it is necessary to know the exhaust gas mass flow rate. For the determination of the exhaust mass flow rate, either of the methods described in paragraphs 8.4.1.3. to 8.4.1.7. may be used.

8.4.1.2. Response time

For the purpose of emissions calculation, the response time of either method described in paragraphs 8.4.1.3. to 8.4.1.7. shall be equal to or less than the analyzer response time of $\leq$10 s, as required in paragraph 9.3.5.

For the purpose of controlling of a partial flow dilution system, a faster response is required. For partial flow dilution systems with online control, the response time shall be $\leq$0.3 s. For partial flow dilution systems with look

ahead control based on a pre-recorded test run, the response time of the exhaust flow measurement system shall be ≤5 s with a rise time of ≤1 s. The system response time shall be specified by the instrument manufacturer. The combined response time requirements for the exhaust gas flow and partial flow dilution system are indicated in paragraph 9.4.6.1.

8.4.1.3. Direct measurement method

Direct measurement of the instantaneous exhaust flow shall be done by systems, such as:

(a) Pressure differential devices, like flow nozzle, (details see ISO 5167)

(b) Ultrasonic flowmeter

(c) Vortex flowmeter

Precautions shall be taken to avoid measurement errors which will impact emission value errors. Such precautions include the careful installation of the device in the engine exhaust system in accordance with the instrument manufacturers' recommendations and to good engineering practice. Especially, engine performance and emissions shall not be affected by the installation of the device.

The flowmeters shall meet the linearity requirements of paragraph 9.2.

8.4.1.4. Air and fuel measurement method

This involves measurement of the airflow and the fuel flow with suitable flowmeters. The calculation of the instantaneous exhaust gas flow shall be as follows:

$$q_{mew,i} = q_{maw,i} + q_{mf,i} \qquad (30)$$

Where:

$q_{mew,i}$ is the instantaneous exhaust mass flow rate, kg/s

$q_{maw,i}$ is the instantaneous intake air mass flow rate, kg/s

$q_{mf,i}$ is the instantaneous fuel mass flow rate, kg/s

The flowmeters shall meet the linearity requirements of paragraph 9.2., but shall be accurate enough to also meet the linearity requirements for the exhaust gas flow.

8.4.1.5. Tracer measurement method

This involves measurement of the concentration of a tracer gas in the exhaust.

A known amount of an inert gas (e.g. pure helium) shall be injected into the exhaust gas flow as a tracer. The gas is mixed and diluted by the exhaust gas, but shall not react in the exhaust pipe. The concentration of the gas shall then be measured in the exhaust gas sample.

In order to ensure complete mixing of the tracer gas, the exhaust gas sampling probe shall be located at least 1 m or 30 times the diameter of the exhaust pipe, whichever is larger, downstream of the tracer gas injection point. The sampling probe may be located closer to the injection point if complete mixing is verified by comparing the tracer gas concentration with the reference concentration when the tracer gas is injected upstream of the engine.

The tracer gas flow rate shall be set so that the tracer gas concentration at engine idle speed after mixing becomes lower than the full scale of the trace gas analyzer.

The calculation of the exhaust gas flow shall be as follows:

$$q_{mew,i} = \frac{q_{vt} \times \rho_e}{60 \times \left(c_{mix,i} - c_b\right)} \quad (31)$$

Where:

$q_{mew,i}$ is the instantaneous exhaust mass flow rate, kg/s

q_{vt} is tracer gas flow rate, cm³/min

$c_{mix,i}$ is the instantaneous concentration of the tracer gas after mixing, ppm

ρ_e is the density of the exhaust gas, kg/m³ (cf. Table 4)

c_b is the background concentration of the tracer gas in the intake air, ppm

The background concentration of the tracer gas (cb) may be determined by averaging the background concentration measured immediately before the test run and after the test run.

When the background concentration is less than 1 per cent of the concentration of the tracer gas after mixing ($c_{mix.i}$) at maximum exhaust flow, the background concentration may be neglected.

The total system shall meet the linearity requirements for the exhaust gas flow of paragraph 9.2.

8.4.1.6. Airflow and air to fuel ratio measurement method

This involves exhaust mass calculation from the air flow and the air to fuel ratio. The calculation of the instantaneous exhaust gas mass flow is as follows:

$$q_{mew,i} = q_{maw,i} \times \left(1 + \frac{1}{A/F_{st} \times \lambda_i}\right) \quad (32)$$

With

$$A/F_{st} = \frac{138.0 \times \left(1 + \frac{\alpha}{4} - \frac{\varepsilon}{2} + \gamma\right)}{12.011 + 1.00794 \times \alpha + 15.9994 \times \varepsilon + 14.0067 \times \delta + 32.065 \times \gamma} \quad (33)$$

$$\lambda_i = \frac{\left(100 - \frac{c_{COd} \times 10^{-4}}{2} - c_{HCw} \times 10^{-4}\right) + \left(\frac{\alpha}{4} \times \frac{1 - \frac{2 \times c_{COd} \times 10^{-4}}{3.5 \times c_{CO2d}}}{1 + \frac{c_{CO} \times 10^{-4}}{3.5 \times c_{CO2d}}} - \frac{\varepsilon}{2} - \frac{\delta}{2}\right) \times \left(c_{CO2d} + c_{COd} \times 10^{-4}\right)}{4.764 \times \left(1 + \frac{\alpha}{4} - \frac{\varepsilon}{2} + \gamma\right) \times \left(c_{CO2d} + c_{COd} \times 10^{-4} + c_{HCw} \times 10^{-4}\right)} \quad (34)$$

Where:

$q_{maw,i}$ is the instantaneous intake air mass flow rate, kg/s

A/F_{st} is the stoichiometric air to fuel ratio, kg/kg

λ_i is the instantaneous excess air ratio

c_{CO2d} is the dry CO_2 concentration, per cent

c_{COd} is the dry CO concentration, ppm

c_{HCw} is the wet HC concentration, ppm

Airflow meter and analyzers shall meet the linearity requirements of paragraph 9.2., and the total system shall meet the linearity requirements for the exhaust gas flow of paragraph 9.2.

If an air to fuel ratio measurement equipment such as a zirconia type sensor is used for the measurement of the excess air ratio, it shall meet the specifications of paragraph 9.3.2.7.

8.4.1.7. Carbon balance method

This involves exhaust mass calculation from the fuel flow and the gaseous exhaust components that include carbon. The calculation of the instantaneous exhaust gas mass flow is as follows:

$$q_{mew,i} = q_{mf,i} \times \left(\frac{w_{BET}^2 \times 1.4}{(1.0828 \times w_{BET} + k_{fd} \times k_c) \times k_c} \left(1 + \frac{H_a}{1000}\right) + 1 \right) \quad (35)$$

With:

$$k_c = (c_{CO2d} - c_{CO2d,a}) \times 0.5441 + \frac{c_{COd}}{18.522} + \frac{c_{HCw}}{17.355} \quad (36)$$

And

$$k_{fd} = -0.055594 \times w_{ALF} + 0.0080021 \times w_{DEL} + 0.0070046 \times w_{EPS} \quad (37)$$

Where:

$q_{mf,i}$ is the instantaneous fuel mass flow rate, kg/s

H_a is the intake air humidity, g water per kg dry air

w_{BET} is the carbon content of the fuel, per cent mass

w_{ALF} is the hydrogen content of the fuel, per cent mass

w_{DEL} is the nitrogen content of the fuel, per cent mass

w_{EPS} is the oxygen content of the fuel, per cent mass

c_{CO2d} is the dry CO_2 concentration, per cent

$c_{CO2d,a}$ is the dry CO_2 concentration of the intake air, per cent

c_{CO} is the dry CO concentration, ppm

c_{HCw} is the wet HC concentration, ppm

8.4.2. Determination of the gaseous components

8.4.2.1. Introduction

The gaseous components in the raw exhaust gas emitted by the engine submitted for testing shall be measured with the measurement and sampling systems described in paragraph 9.3. and Annex 3. The data evaluation is described in paragraph 8.4.2.2.

Two calculation procedures are described in paragraphs 8.4.2.3. and 8.4.2.4., which are equivalent for the reference fuels of Annex 2. The procedure in paragraph 8.4.2.3. is more straightforward, since it uses tabulated u values for the ratio between component and exhaust gas density. The procedure in paragraph 8.4.2.4. is more accurate for fuel qualities that deviate from the specifications in Annex 2, but requires elementary analysis of the fuel composition.

8.4.2.2. Data evaluation

For the evaluation of the gaseous emissions, the raw emission concentrations (HC, CO and NO_x) and the exhaust gas mass flow rate shall be recorded and stored with at least 2 Hz on a computer system. All other data shall be recorded with a sample rate of at least 1 Hz. For analogue analyzers, the response shall be recorded, and the calibration data may be applied online or offline during the data evaluation.

For calculation of the mass emission of the gaseous components, the traces of the recorded concentrations and the trace of the exhaust gas mass flow rate shall be time aligned by the transformation time as defined in paragraph 3.1.30.* Therefore, the response time of each gaseous emissions analyzer and of the exhaust gas mass flow system shall be determined in accordance with paragraphs 8.4.1.2. and 9.3.5., respectively, and recorded.

8.4.2.3. Calculation of mass emission based on tabulated values

The mass of the pollutants (g/test) shall be determined by calculating the instantaneous mass emissions from the raw concentrations of the pollutants and the exhaust gas mass flow, aligned for the transformation time as determined in accordance with paragraph 8.4.2.2., integrating the instantaneous values over the cycle, and multiplying the integrated values with the u values from Table 5. If measured on a dry basis, the dry/wet correction in accordance with paragraph 8.1. shall be applied to the instantaneous concentration values before any further calculation is done.

For the calculation of NO_x, the mass emission shall be multiplied, where applicable, with the humidity correction factor $k_{h,D}$, or $k_{h,G}$, as determined in accordance with paragraph 8.2.

The following equation shall be applied:

$$m_{gas} = u_{gas} \times \sum_{i=1}^{i=n} c_{gas,i} \times q_{mew,i} \times \frac{1}{f} \quad \text{(in g/test)} \qquad (38)$$

Where:

u_{gas} is the ratio between density of exhaust component and density of exhaust gas

$c_{gas,i}$ is the instantaneous concentration of the component in the exhaust gas, ppm

$q_{mew,i}$ is the instantaneous exhaust mass flow, kg/s

f is the data sampling rate, Hz

n is the number of measurements

* *Note by the secretariat:* The reference shall read 9.4.6.6.

Table 5
Raw exhaust gas *u* values and component densities

Fuel	ρ_e	*Gas*					
		NO_x	*CO*	*HC*	CO_2	O_2	CH_4
		ρ_{gas} [kg/m³]					
		2.053	1.250	a)	1.9636	1.4277	0.716
		u_{gas} b)					
Diesel	1.2943	0.001586	0.000966	0.000479	0.001517	0.001103	0.000553
Ethanol	1.2757	0.001609	0.000980	0.000805	0.001539	0.001119	0.000561
CNG c)	1.2661	0.001621	0.000987	0.000558 d)	0.001551	0.001128	0.000565
Propane	1.2805	0.001603	0.000976	0.000512	0.001533	0.001115	0.000559
Butane	1.2832	0.001600	0.000974	0.000505	0.001530	0.001113	0.000558
LPG e)	1.2811	0.001602	0.000976	0.000510	0.001533	0.001115	0.000559

a) depending on fuel
b) at λ = 2, dry air, 273 K, 101.3 kPa
c) *u* accurate within 0.2 per cent for mass composition of: C = 66 - 76 %; H = 22 - 25 %; N = 0 - 12 %
d) NMHC on the basis of $CH_{2.93}$ (for total HC the u_{gas} coefficient of CH_4 shall be used)
e) *u* accurate within 0.2 per cent for mass composition of: C3 = 70 - 90 %; C4 = 10 - 30 %

8.4.2.4. Calculation of mass emission based on exact equations

The mass of the pollutants (g/test) shall be determined by calculating the instantaneous mass emissions from the raw concentrations of the pollutants, the *u* values and the exhaust gas mass flow, aligned for the transformation time as determined in accordance with paragraph 8.4.2.2. and integrating the instantaneous values over the cycle. If measured on a dry basis, the dry/wet correction in accordance with paragraph 8.1. shall be applied to the instantaneous concentration values before any further calculation is done.

For the calculation of NO_x, the mass emission shall be multiplied with the humidity correction factor $k_{h,D}$, or $k_{h,G}$, as determined in accordance with paragraph 8.2.

The following equation shall be applied:

$$m_{gas} = \sum_{i=1}^{i=n} u_{gas,i} \times c_{gas,i} \times q_{mew,i} \times \frac{1}{f} \quad \text{(in g/test)} \qquad (39)$$

Where:

$u_{gas,i}$ is the instantaneous density ratio of exhaust component and exhaust gas

$c_{gas,i}$ is the instantaneous concentration of the component in the exhaust gas, ppm

$q_{mew,i}$ is the instantaneous exhaust mass flow, kg/s

f is the data sampling rate, Hz

n is the number of measurements

The instantaneous *u* values shall be calculated as follows:

$$u_{gas,i} = M_{gas} / (M_{e,i} \text{ x } 1{,}000) \qquad (40)$$

Or

$u_{gas,i} = \rho_{gas} / (\rho_{e,i} \times 1{,}000)$ (41)

With

$\rho_{gas} = M_{gas} / 22.414$ (42)

Where:

M_{gas} is the molar mass of the gas component, g/mol (cf. Annex 6)

$M_{e,i}$ is the instantaneous molar mass of the exhaust gas, g/mol

ρ_{gas} is the density of the gas component, kg/m^3

$\rho_{e,i}$ is the instantaneous density of the exhaust gas, kg/m^3

The molar mass of the exhaust, M_e, shall be derived for a general fuel composition $CH_\alpha O_\varepsilon N_\delta S_\gamma$ under the assumption of complete combustion, as follows:

$$M_{e,i} = \frac{1 + \frac{q_{mf,i}}{q_{maw,i}}}{\frac{q_{mf,i}}{q_{maw,i}} \times \frac{\frac{\alpha}{4} + \frac{\varepsilon}{2} + \frac{\delta}{2}}{12.011 + 1.00794 \times \alpha + 15.9994 \times \varepsilon + 14.0067 \times \delta + 32.065 \times \gamma} + \frac{\frac{H_a \times 10^{-3}}{2 \times 1.00794 + 15.9994} + \frac{1}{M_a}}{1 + H_a \times 10^{-3}}} \quad (43)$$

Where:

$q_{maw,i}$ is the instantaneous intake air mass flow rate on wet basis, kg/s

$q_{mf,i}$ is the instantaneous fuel mass flow rate, kg/s

H_a is the intake air humidity, g water per kg dry air

M_a is the molar mass of the dry intake air = 28.965 g/mol

The exhaust density ρ_e shall be derived, as follows:

$$\rho_{e,i} = \frac{1{,}000 + H_a + 1{,}000 \times (q_{mf,i}/q_{mad,i})}{773.4 + 1.2434 \times H_a + k_{fw} \times 1{,}000 \times (q_{mf,i}/q_{mad,i})} \quad (44)$$

Where:

$q_{mad,i}$ is the instantaneous intake air mass flow rate on dry basis, kg/s

$q_{mf,i}$ is the instantaneous fuel mass flow rate, kg/s

H_a is the intake air humidity, g water per kg dry air

k_{fw} is the fuel specific factor of wet exhaust (equation 18) in paragraph 8.1.1.

8.4.3. Particulate determination

8.4.3.1. Data evaluation

The particulate sample mass shall be calculated in accordance with equation 29 of paragraph 8.3. For the evaluation of the particulate concentration, the total sample mass (m_{sep}) through the filter over the test cycle shall be recorded.

With the prior approval of the type approval or certification authority, the particulate mass may be corrected for the particulate level of the diluent, as determined in paragraph 7.5.6., in line with good engineering practice and the specific design features of the particulate measurement system used.

8.4.3.2. Calculation of mass emission

Depending on system design, the mass of particulates (g/test) shall be calculated by either of the methods in paragraph 8.4.3.2.1. or 8.4.3.2.2. after buoyancy correction of the particulate sample filter in accordance with paragraph 8.3.

8.4.3.2.1. Calculation based on sample ratio

$$m_{PM} = m_p / (r_s \times 1{,}000) \quad (45)$$

Where:

m_p is the particulate mass sampled over the cycle, mg

r_s is the average sample ratio over the test cycle

With

$$r_s = \frac{m_{se}}{m_{ew}} \times \frac{m_{sep}}{m_{sed}} \quad (46)$$

Where:

m_{se} is the sample mass over the cycle, kg

m_{ew} is the total exhaust mass flow over the cycle, kg

m_{sep} is the mass of diluted exhaust gas passing the particulate collection filters, kg

m_{sed} is the mass of diluted exhaust gas passing the dilution tunnel, kg

In case of the total sampling type system, m_{sep} and m_{sed} are identical.

8.4.3.2.2. Calculation based on dilution ratio

$$m_{PM} = \frac{m_p}{m_{sep}} \times \frac{m_{edf}}{1{,}000} \quad (47)$$

Where:

m_p is the particulate mass sampled over the cycle, mg

m_{sep} is the mass of diluted exhaust gas passing the particulate collection filters, kg

m_{edf} is the mass of equivalent diluted exhaust gas over the cycle, kg

The total mass of equivalent diluted exhaust gas mass over the cycle shall be determined as follows:

$$m_{edf} = \sum_{i=1}^{i=n} q_{medf,i} \times \frac{1}{f} \quad (48)$$

$$q_{medf,I} = q_{mew,i} \times r_{d,i} \quad (49)$$

$$r_{d,i} = \frac{q_{mdew,,i}}{\left(q_{mdew,,i} - q_{mdw,,i}\right)} \quad (50)$$

Where:

$q_{medf,i}$ is the instantaneous equivalent diluted exhaust mass flow rate, kg/s

$q_{mew,i}$ is the instantaneous exhaust mass flow rate, kg/s

$r_{d,i}$ is the instantaneous dilution ratio

$q_{mdew,i}$ is the instantaneous diluted exhaust mass flow rate, kg/s

$q_{mdw,i}$ is the instantaneous diluent mass flow rate, kg/s

f is the data sampling rate, Hz

n is the number of measurements

8.5. Full flow dilution measurement (CVS)

The concentration signals, either by integration over the cycle or by bag sampling, of the gaseous components shall be used for the calculation of the mass emissions by multiplication with the diluted exhaust mass flow rate. The exhaust mass flow rate shall be measured with a Constant Volume Sampling (CVS) system, which may use a positive displacement pump (PDP), a Critical Flow Venturi (CFV) or a Subsonic Venturi (SSV) with or without flow compensation.

For bag sampling and particulate sampling, a proportional sample shall be taken from the diluted exhaust gas of the CVS system. For a system without flow compensation, the ratio of sample flow to CVS flow shall not vary by more than ±2.5 per cent from the set point of the test. For a system with flow compensation, each individual flow rate shall be constant within ±2.5 per cent of its respective target flow rate.

The complete test set up is schematically shown in Figure 7.

Figure 7
Scheme of full flow measurement system

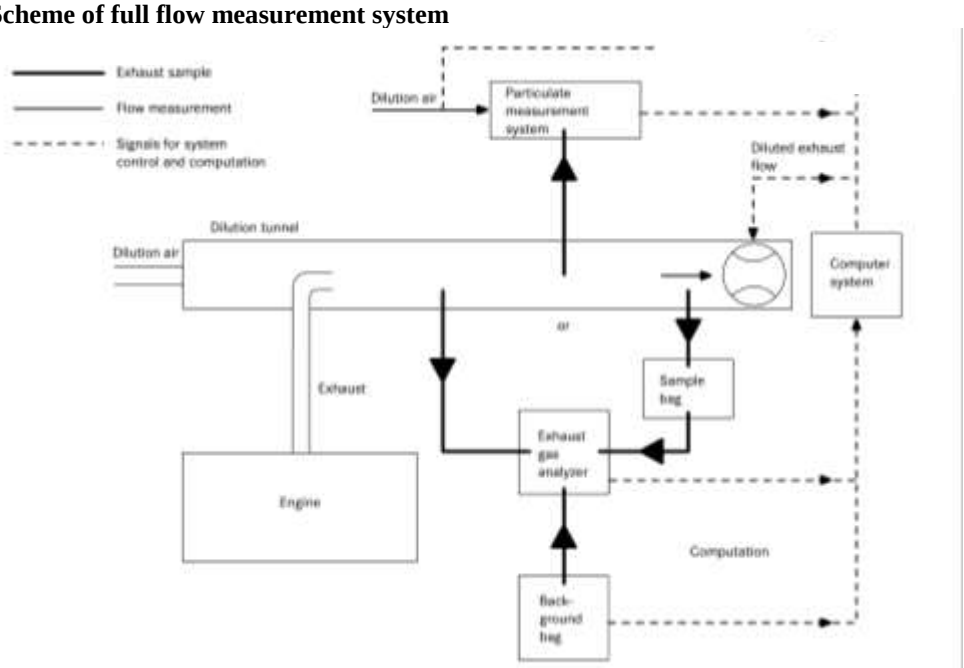

8.5.1. Determination of the diluted exhaust gas flow

8.5.1.1. Introduction

For calculation of the emissions in the diluted exhaust gas, it is necessary to know the diluted exhaust gas mass flow rate. The total diluted exhaust gas flow over the cycle (kg/test) shall be calculated from the measurement values over the cycle and the corresponding calibration data of the flow measurement device (V_0 for PDP, K_V for CFV, C_d for SSV) by either of the methods described in paragraphs 8.5.1.2. to 8.5.1.4. If the total sample flow of particulates (m_{sep}) exceeds 0.5 per cent of the total CVS flow (m_{ed}), the CVS flow shall be corrected for m_{sep} or the particulate sample flow shall be returned to the CVS prior to the flow measuring device.

8.5.1.2. PDP-CVS system

The calculation of the mass flow over the cycle is as follows, if the temperature of the diluted exhaust is kept within ±6 K over the cycle by using a heat exchanger:

$$m_{ed} = 1.293 \times V_0 \times n_P \times p_p \times 273 / (101.3 \times T) \quad (51)$$

Where:

V_0 is the volume of gas pumped per revolution under test conditions, m³/rev

n_P is the total revolutions of pump per test

p_p is the absolute pressure at pump inlet, kPa

T is the average temperature of the diluted exhaust gas at pump inlet, K

If a system with flow compensation is used (i.e. without heat exchanger), the instantaneous mass emissions shall be calculated and integrated over the cycle. In this case, the instantaneous mass of the diluted exhaust gas shall be calculated as follows:

$$m_{ed,i} = 1.293 \times V_0 \times n_{P,i} \times p_p \times 273 / (101.3 \times T) \quad (52)$$

Where:

$n_{P,i}$ is the total revolutions of pump per time interval

8.5.1.3. CFV-CVS system

The calculation of the mass flow over the cycle is as follows, if the temperature of the diluted exhaust is kept within ±11 K over the cycle by using a heat exchanger:

$$m_{ed} = 1.293 \times t \times K_v \times p_p / T^{0.5} \quad (53)$$

Where:

t is the cycle time, s

K_V is the calibration coefficient of the critical flow venturi for standard conditions

p_p is the absolute pressure at venturi inlet, kPa

T is the absolute temperature at venturi inlet, K

If a system with flow compensation is used (i.e. without heat exchanger), the instantaneous mass emissions shall be calculated and integrated over the cycle. In this case, the instantaneous mass of the diluted exhaust gas shall be calculated as follows:

$$m_{ed,i} = 1.293 \times \Delta t_i \times K_V \times p_p / T^{0.5} \quad (54)$$

Where:

Δt_i is the time interval, s

8.5.1.4. SSV-CVS system

The calculation of the mass flow over the cycle shall be as follows, if the temperature of the diluted exhaust is kept within ±11 K over the cycle by using a heat exchanger:

$$m_{ed} = 1.293 \times Q_{SSV} \quad (55)$$

With

$$Q_{SSV} = A_0 d_V{}^2 C_d p_p \sqrt{\left[\frac{1}{T}\left(r_p{}^{1.4286} - r_p{}^{1.7143}\right) \cdot \left(\frac{1}{1 - r_D{}^4 r_p{}^{1.4286}}\right)\right]} \quad (56)$$

Where:

A_0 is 0.006111 in SI units of $\left(\frac{m^3}{\min}\right)\left(\frac{K^{\frac{1}{2}}}{kPa}\right)\left(\frac{1}{mm^2}\right)$

d_V is the diameter of the SSV throat, m

C_d is the discharge coefficient of the SSV

p_p is the absolute pressure at venturi inlet, kPa

T is the temperature at the venturi inlet, K

r_p is the ratio of the SSV throat to inlet absolute static pressure, $1 - \frac{\Delta p}{p_a}$

r_D is the ratio of the SSV throat diameter, d, to the inlet pipe inner diameter D

If a system with flow compensation is used (i.e. without heat exchanger), the instantaneous mass emissions shall be calculated and integrated over the cycle. In this case, the instantaneous mass of the diluted exhaust gas shall be calculated as follows:

$$m_{ed} = 1.293 \times Q_{SSV} \times \Delta t_i \quad (57)$$

Where:

Δt_i is the time interval, s

The real time calculation shall be initialized with either a reasonable value for C_d, such as 0.98, or a reasonable value of Q_{ssv}. If the calculation is initialized with Q_{ssv}, the initial value of Q_{ssv} shall be used to evaluate the Reynolds number.

During all emissions tests, the Reynolds number at the SSV throat shall be in the range of Reynolds numbers used to derive the calibration curve developed in paragraph 9.5.4.

8.5.2. Determination of the gaseous components

8.5.2.1. Introduction

The gaseous components in the diluted exhaust gas emitted by the engine submitted for testing shall be measured by the methods described in Annex 3. Dilution of the exhaust shall be done with filtered ambient air, synthetic air or nitrogen. The flow capacity of the full flow system shall be large enough to completely eliminate water condensation in the dilution and sampling systems. Data evaluation and calculation procedures are described in paragraphs 8.5.2.2. and 8.5.2.3.

8.5.2.2. Data evaluation

For continuous sampling, the emission concentrations (HC, CO and NO_x) shall be recorded and stored with at least 1 Hz on a computer system, for bag sampling one mean value per test is required. The diluted exhaust gas mass flow rate and all other data shall be recorded with a sample rate of at least 1 Hz. For analogue analyzers the response will be recorded, and the calibration data may be applied online or offline during the data evaluation.

8.5.2.3. Calculation of mass emission

8.5.2.3.1. Systems with constant mass flow

For systems with heat exchanger, the mass of the pollutants shall be determined from the following equation:

$$m_{gas} = u_{gas} \times c_{gas} \times m_{ed} \quad \text{(in g/test)} \qquad (58)$$

Where:

u_{gas} is the ratio between density of exhaust component and density of air

c_{gas} is the average background corrected concentration of the component, ppm

m_{ed} is the total diluted exhaust mass over the cycle, kg

If measured on a dry basis, the dry/wet correction in accordance with paragraph 8.1. shall be applied.

For the calculation of NO_x, the mass emission shall be multiplied, if applicable, with the humidity correction factor $k_{h,D}$, or $k_{h,G}$, as determined in accordance with paragraph 8.2.

The u values are given in Table 6. For calculating the u_{gas} values, the density of the diluted exhaust gas has been assumed to be equal to air density. Therefore, the u_{gas} values are identical for single gas components, but different for HC.

Table 6
Diluted exhaust gas *u* values and component densities

Fuel	ρ_{de}	*Gas*					
		NO_x	CO	HC	CO_2	O_2	CH_4
		ρ_{gas} [kg/m³]					
		2.053	1.250	a)	1.9636	1.4277	0.716
		u_{gas} b)					
Diesel	1.293	0.001588	0.000967	0.000480	0.001519	0.001104	0.000553
Ethanol	1.293	0.001588	0.000967	0.000795	0.001519	0.001104	0.000553
CNG c)	1.293	0.001588	0.000967	0.000584 d)	0.001519	0.001104	0.000553
Propane	1.293	0.001588	0.000967	0.000507	0.001519	0.001104	0.000553
Butane	1.293	0.001588	0.000967	0.000501	0.001519	0.001104	0.000553
LPG e)	1.293	0.001588	0.000967	0.000505	0.001519	0.001104	0.000553

a) depending on fuel
b) at λ = 2, dry air, 273 K, 101.3 kPa
c) *u* accurate within 0.2 per cent for mass composition of: C = 66 - 76 %; H = 22 - 25 %; N = 0 - 12 %
d) NMHC on the basis of $CH_{2.93}$ (for total HC the u_{gas} coefficient of CH_4 shall be used)
e) *u* accurate within 0.2 per cent for mass composition of: C3 = 70 - 90 %; C4 = 10 - 30 %

Alternatively, the *u* values may be calculated using the exact calculation method generally described in paragraph 8.4.2.4., as follows:

$$u_{\text{gas}} = \frac{M_{\text{gas}}}{M_{\text{d}} \times \left(1 - \frac{1}{D}\right) + M_{\text{e}} \times \left(\frac{1}{D}\right)} \qquad (59)$$

Where:

M_{gas} is the molar mass of the gas component, g/mol (cf. Annex 6)

M_{e} is the molar mass of the exhaust gas, g/mol

M_{d} is the molar mass of the diluent = 28.965 g/mol

D is the dilution factor (see paragraph 8.5.2.3.2.)

8.5.2.3.2. Determination of the background corrected concentrations

The average background concentration of the gaseous pollutants in the diluent shall be subtracted from the measured concentrations to get the net concentrations of the pollutants. The average values of the background concentrations can be determined by the sample bag method or by continuous measurement with integration. The following equation shall be used:

$$c_{\text{gas}} = c_{\text{gas,e}} - c_{\text{d}} \times (1 - (1/D)) \qquad (60)$$

Where:

$c_{\text{gas,e}}$ is the concentration of the component measured in the diluted exhaust gas, ppm

c_{d} is the concentration of the component measured in the diluent, ppm

D is the dilution factor

The dilution factor shall be calculated as follows:

(a) For diesel and LPG fuelled gas engines

$$D = \frac{F_S}{c_{CO2,e} + \left(c_{HC,e} + c_{CO,e}\right) \times 10^{-4}} \quad (61)$$

(b) For NG fuelled gas engines

$$D = \frac{F_S}{c_{CO2,e} + \left(c_{NMHC,e} + c_{CO,e}\right) \times 10^{-4}} \quad (62)$$

Where:

$c_{CO2,e}$ is the wet concentration of CO_2 in the diluted exhaust gas, per cent vol

$c_{HC,e}$ is the wet concentration of HC in the diluted exhaust gas, ppm C1

$c_{NMHC,e}$ is the wet concentration of NMHC in the diluted exhaust gas, ppm C1

$c_{CO,e}$ is the wet concentration of CO in the diluted exhaust gas, ppm

F_S is the stoichiometric factor

The stoichiometric factor shall be calculated as follows:

$$F_S = 100 \times \frac{1}{1 + \frac{\alpha}{2} + 3.76 \times \left(1 + \frac{\alpha}{4}\right)} \quad (63)$$

Where:

α is the molar hydrogen ratio of the fuel (H/C)

Alternatively, if the fuel composition is not known, the following stoichiometric factors may be used:

F_S (diesel) = 13.4

F_S (LPG) = 11.6

F_S (NG) = 9.5

8.5.2.3.3. Systems with flow compensation

For systems without heat exchanger, the mass of the pollutants (g/test) shall be determined by calculating the instantaneous mass emissions and integrating the instantaneous values over the cycle. Also, the background correction shall be applied directly to the instantaneous concentration value. The following equation shall be applied:

$$m_{gas} = \sum_{i=1}^{n} \left[\left(m_{ed,i} \times c_{gas,e} \times u_{gas}\right)\right] - \left[\left(m_{ed} \times c_d \times \left(1 - 1/D\right) \times u_{gas}\right)\right] \quad (64)$$

Where:

$c_{gas,e}$ is the concentration of the component measured in the diluted exhaust gas, ppm

c_d is the concentration of the component measured in the diluent, ppm

$m_{ed,i}$ is the instantaneous mass of the diluted exhaust gas, kg

m_{ed} is the total mass of diluted exhaust gas over the cycle, kg

u_{gas} is the tabulated value from Table 6

D is the dilution factor

8.5.3. Particulate determination

8.5.3.1. Calculation of mass emission

The particulate mass (g/test) shall be calculated after buoyancy correction of the particulate sample filter in accordance with paragraph 8.3., as follows:

$$m_{PM} = \frac{m_p}{m_{sep}} \times \frac{m_{ed}}{1{,}000} \qquad (65)$$

Where:

m_p is the particulate mass sampled over the cycle, mg

m_{sep} is the mass of diluted exhaust gas passing the particulate collection filters, kg

m_{ed} is the mass of diluted exhaust gas over the cycle, kg

With:

$$m_{sep} = m_{set} - m_{ssd} \qquad (66)$$

Where:

m_{set} is the mass of double diluted exhaust gas through particulate filter, kg

m_{ssd} is the mass of secondary diluent, kg

If the particulate background level of the diluent is determined in accordance with paragraph 7.5.6., the particulate mass may be background corrected. In this case, the particulate mass (g/test) shall be calculated as follows:

$$m_{PM} = \left[\frac{m_p}{m_{sep}} - \left(\frac{m_b}{m_{sd}} \times \left(1 - \frac{1}{D}\right)\right)\right] \times \frac{m_{ed}}{1{,}000} \qquad (67)$$

Where:

m_{sep} is the mass of diluted exhaust gas passing the particulate collection filters, kg

m_{ed} is the mass of diluted exhaust gas over the cycle, kg

m_{sd} is the mass of diluent sampled by background particulate sampler, kg

m_b is the mass of the collected background particulates of the diluent, mg

D is the dilution factor as determined in paragraph 8.5.2.3.2.

8.6. General calculations

8.6.1. Drift correction

With respect to drift verification in paragraph 7.8.4., the corrected concentration value shall be calculated as follows:

$$c_{\mathrm{cor}} = c_{\mathrm{ref,z}} + \left(c_{\mathrm{ref,s}} - c_{\mathrm{ref,z}}\right)\left(\frac{2 \cdot c_{\mathrm{gas}} - \left(c_{\mathrm{pre,z}} + c_{\mathrm{post,z}}\right)}{\left(c_{\mathrm{pre,s}} + c_{\mathrm{post,s}}\right) - \left(c_{\mathrm{pre,z}} + c_{\mathrm{post,z}}\right)}\right) \qquad (68)$$

Where:

$c_{\mathrm{ref,z}}$ is the reference concentration of the zero gas (usually zero), ppm

$c_{\mathrm{ref,s}}$ is the reference concentration of the span gas, ppm

$c_{\mathrm{pre,z}}$ is the pre-test analyzer concentration of the zero gas, ppm

$c_{\mathrm{pre,s}}$ is the pre-test analyzer concentration of the span gas, ppm

$c_{\mathrm{post,z}}$ is the post-test analyzer concentration of the zero gas, ppm

$c_{\mathrm{post,s}}$ is the post-test analyzer concentration of the span gas, ppm

c_{gas} is the sample gas concentration, ppm

Two sets of brake-specific emission results shall be calculated for each component in accordance with paragraphs 8.3. and/or 8.4., after any other corrections have been applied. One set shall be calculated using uncorrected concentrations and another set shall be calculated using the concentrations corrected for drift in accordance with equation 68.

Depending on the measurement system and calculation method used, the uncorrected emissions results shall be calculated with equations 38, 39, 58, 59 or 64, respectively. For calculation of the corrected emissions, c_{gas} in equations 38, 39, 58, 59 or 64, respectively, shall be replaced with c_{cor} of equation 68. If instantaneous concentration values $c_{\mathrm{gas,i}}$ are used in the respective equation, the corrected value shall also be applied as instantaneous value $c_{\mathrm{cor,i}}$. In equation 64, the correction shall be applied to both the measured and the background concentration.

The comparison shall be made as a percentage of the uncorrected results. The difference between the uncorrected and the corrected brake-specific emission values shall be within ±4 per cent of the uncorrected brake-specific emission values or within ±4 per cent of the respective limit value, whichever is greater. If the drift is greater than 4 per cent, the test shall be voided.

If drift correction is applied, only the drift-corrected emission results shall be used when reporting emissions.

8.6.2. Calculation of NMHC and CH_4 with the non-methane cutter

The calculation of NMHC and CH_4 depends on the calibration method used. The FID for the measurement without NMC (lower path of Annex 3, Figure 11), shall be calibrated with propane. For the calibration of the FID in series with NMC (upper path of Annex 3, Figure 11), the following methods are permitted.

(a) Calibration gas – propane; propane bypasses NMC,

(b) Calibration gas – methane; methane passes through NMC.

The concentration of NMHC and CH_4 shall be calculated as follows for (a):

:

$$c_{NMHC} = \frac{c_{HC(w/oNMC)} \times (1 - E_M) - c_{HC(w/NMC)}}{E_E - E_M} \quad (69)$$

$$c_{CH4} = \frac{c_{HC(w/NMC)} - c_{HC(w/oNMC)} \times (1 - E_E)}{r_h \times (E_E - E_M)} \quad (70)$$

The concentration of NMHC and CH_4 shall be calculated as follows for (b):

$$c_{NMHC} = \frac{c_{HC(w/oNMC)} \times (1 - E_M) - c_{HC(w/NMC)} \times r_h \times (1 - E_M)}{E_E - E_M} \quad (71)$$

$$c_{CH4} = \frac{c_{HC(w/NMC)} \times r_h \times (1 - E_M) - c_{HC(w/oNMC)} \times (1 - E_E)}{r_h \times (E_E - E_M)} \quad (72)$$

Where:

$c_{HC(w/NMC)}$ is the HC concentration with sample gas flowing through the NMC, ppm

$c_{HC(w/oNMC)}$ is the HC concentration with sample gas bypassing the NMC, ppm

r_h is the methane response factor as determined per paragraph 9.3.7.2.

E_M is the methane efficiency as determined per paragraph 9.3.8.1.

E_E is the ethane efficiency as determined per paragraph 9.3.8.2.

If $r_h < 1.05$, it may be omitted in equations 70, 71 and 72.

8.6.3. Calculation of the specific emissions

8.6.3.1. Conventional engines

The specific emissions e_{gas} or e_{PM} (g/kWh) shall be calculated for each individual component in the following ways depending on the type of test cycle.

For the WHSC, hot WHTC, or cold WHTC, the following equation shall be applied:

$$e = \frac{m}{W_{act}} \quad (73)$$

Where:

m is the mass emission of the component, g/test

W_{act} is the actual cycle work as determined in accordance with paragraph 7.8.6., kWh

For the WHTC, the final test result shall be a weighted average from cold start test and hot start test in accordance with the following equation:

$$e = \frac{(0.14 \times m_{cold}) + (0.86 \times m_{hot})}{(0.14 \times W_{act,cold}) + (0.86 \times W_{act,hot})} \quad (74)$$

Where:

m_{cold} is the mass emission of the component on the cold start test, g/test

m_{hot} is the mass emission of the component on the hot start test, g/test

$W_{act,cold}$ is the actual cycle work on the cold start test, kWh

$W_{act,hot}$ is the actual cycle work on the hot start test, kWh

8.6.3.2. Hybrid vehicles

The specific emissions e_{gas} or e_{PM} (g/kWh) shall be calculated for each individual component in accordance with paragraphs A.9.2.7. or A.10.7., respectively.

8.6.3.3. Regeneration adjustment factors

If periodic regeneration in accordance with paragraph 6.6.2 applies, the regeneration adjustment factors $k_{r,u}$ or $k_{r,d}$ shall be multiplied with or be added to, respectively, the specific emissions result e as determined in equations 73 and 74, or equations 112 and 113 in paragraph A.9.2.7. or equations 248 and 249 in paragraph A.10.7.

9. Equipment specification and verification

This paragraph describes the required calibrations, verifications and interference checks of the measurement systems. Calibrations or verifications shall be generally performed over the complete measurement chain.

Internationally recognized-traceable standards shall be used to meet the tolerances specified for calibrations and verifications.

Instruments shall meet the specifications in Table 7 for all ranges to be used for testing. Furthermore, any documentation received from instrument manufacturers showing that instruments meet the specifications in Table 7 shall be kept.

Table 8 summarizes the calibrations and verifications described in paragraph 9. and indicates when these have to be performed.

Overall systems for measuring pressure, temperature, and dew point shall meet the requirements in Table 8 and Table 9. Pressure transducers shall be located in a temperature-controlled environment, or they shall compensate for temperature changes over their expected operating range. Transducer materials shall be compatible with the fluid being measured.

Table 7
Recommended performance specifications for measurement instruments

Measurement instrument	*Complete system rise time*	*Recording frequency*	*Accuracy*	*Repeatability*
Engine speed transducer	1 s	1 Hz means	2.0 % of pt. or 0.5 % of max	1.0 % of pt. or 0.25 % of max
Engine torque transducer	1 s	1 Hz means	2.0 % of pt. or 1.0 % of max	1.0 % of pt. or 0.5 % of max
Fuel flow meter	5 s	1 Hz	2.0 % of pt. or 1.5 % of max	1.0 % of pt. or 0.75 % of max
CVS flow (CVS with heat exchanger)	1 s (5 s)	1 Hz means (1 Hz)	2.0 % of pt. or 1.5 % of max	1.0 % of pt. or 0.75 % of max
Dilution air, inlet air, exhaust, and sample flow meters	1 s	1 Hz means of 5 Hz samples	2.5 % of pt. or 1.5 % of max	1.25 % of pt. or 0.75 % of max
Continuous gas analyzer raw	2.5 s	2 Hz	2.0 % of pt. or 2.0 % of meas.	1.0 % of pt. or 1.0 % of meas.
Continuous gas analyzer dilute	5 s	1 Hz	2.0 % of pt. or 2.0 % of meas.	1.0 % of pt. or 1.0 % of meas.
Batch gas analyzer	N/A	N/A	2.0 % of pt. or 2.0 % of meas.	1.0 % of pt. or 1.0 % of meas.
Analytical balance	N/A	N/A	1.0 µg	0.5 µg

Note: Accuracy and repeatability are based on absolute values. "pt." refers to the overall mean value expected at the respective emission limit; "max." refers to the peak value expected at the respective emission limit over the duty cycle, not the maximum of the instrument's range; "meas." refers to the actual mean measured over the duty cycle.

Table 8
Summary of calibration and verifications

Type of calibration or verification	*Minimum frequency* [(a)]
9.2.: Linearity	Speed: Upon initial installation, within 370 days before testing and after major maintenance. Torque: Upon initial installation, within 370 days before testing and after major maintenance. Clean air and diluted exhaust flows: Upon initial installation, within 370 days before testing and after major maintenance, unless flow is verified by propane check or by carbon oxygen balance. Raw exhaust flow: Upon initial installation, within 185 days before testing and after major maintenance. Gas analyzers: Upon initial installation, within 35 days before testing and after major maintenance. PM balance: Upon initial installation, within 370 days before testing and after major maintenance. Pressure and temperature: Upon initial installation, within 370 days before testing and after major maintenance.
9.3.1.2.: Accuracy, repeatability and noise	Accuracy: Not required, but recommended for initial installation. Repeatability: Not required, but recommended for initial installation. Noise: Not required, but recommended for initial installation.
9.3.4.: Vacuum-side leak check	Before each laboratory test in accordance with paragraph 7.
9.3.6.: NO_x converter efficiency	Upon initial installation, within 35 days before testing, and after major maintenance.
9.3.7.1.: Optimization of FID detector response	Upon initial installation and after major maintenance
9.3.7.2.: Hydrocarbon response factors	Upon initial installation, within 185 days before testing, and after major maintenance.
9.3.7.3.: Oxygen interference check	Upon initial installation, and after major maintenance and after FID optimization in accordance with paragraph 9.3.7.1.
9.3.8.: Efficiency of the Non-Methane Cutter (NMC)	Upon initial installation, within 185 days before testing, and after major maintenance.
9.3.9.1.: CO analyzer interference check	Upon initial installation and after major maintenance.
9.3.9.2.: NO_x analyzer quench check for CLD	Upon initial installation and after major maintenance.
9.3.9.3.: NO_x analyzer quench check for NDUV	Upon initial installation and after major maintenance.
9.3.9.4.: Sampler dryer	Upon initial installation and after major maintenance.
9.4.5.6.: Flow instrument calibration	Upon initial installation and after major maintenance.

Type of calibration or verification	*Minimum frequency* [(a)]
9.5.: CVS calibration	Upon initial installation and after major maintenance.
9.5.5.: CVS verification[(b)]	Upon initial installation, within 35 days before testing, and after major maintenance (propane check).

(a) Perform calibrations and verifications more frequently, in accordance with measurement system manufacturer instructions and good engineering judgment.

(b) The CVS verification is not required for systems that agree within ±2 per cent based on a chemical balance of carbon or oxygen of the intake air, fuel, and diluted exhaust.

9.1. Dynamometer specification

9.1.1. Shaft work

An engine dynamometer shall be used that has adequate characteristics to perform the applicable duty cycle including the ability to meet the appropriate cycle validation criteria. The following dynamometers may be used:

(a) Eddy-current or water-brake dynamometers;

(b) Alternating-current or direct-current motoring dynamometers;

(c) One or more dynamometers.

9.1.2. Torque measurement

Load cell or in-line torque meter may be used for torque measurements.

When using a load cell, the torque signal shall be transferred to the engine axis and the inertia of the dynamometer shall be considered. The actual engine torque is the torque read on the load cell plus the moment of inertia of the brake multiplied by the angular acceleration. The control system has to perform such a calculation in real time.

9.2. Linearity requirements

The calibration of all measuring instruments and systems shall be traceable to national (international) standards. The measuring instruments and systems shall comply with the linearity requirements given in Table 9. The linearity verification in accordance with paragraph 9.2.1. shall be performed for the gas analyzers within 35 days before testing or whenever a system repair or change is made that could influence calibration. For the other instruments and systems, the linearity verification shall be done within 370 days before testing.

Table 9
Linearity requirements of instruments and measurement systems

Measurement system	$\lvert x_{\min} \cdot (a_1 - 1) + a_0 \rvert$	*Slope* a_1	*Standard error SEE*	*Coefficient of determination* r^2
Engine speed	≤ 0.05 % max	0.98 - 1.02	≤ 2 % max	≥ 0.990
Engine torque	≤ 1 % max	0.98 - 1.02	≤ 2 % max	≥ 0.990
Fuel flow	≤ 1 % max	0.98 - 1.02	≤ 2 % max	≥ 0.990
Airflow	≤ 1 % max	0.98 - 1.02	≤ 2 % max	≥ 0.990
Exhaust gas flow	≤ 1 % max	0.98 - 1.02	≤ 2 % max	≥ 0.990
Diluent flow	≤ 1 % max	0.98 - 1.02	≤ 2 % max	≥ 0.990
Diluted exhaust gas flow	≤ 1 % max	0.98 - 1.02	≤ 2 % max	≥ 0.990
Sample flow	≤ 1 % max	0.98 - 1.02	≤ 2 % max	≥ 0.990
Gas analyzers	≤ 0.5 % max	0.99 - 1.01	≤ 1 % max	≥ 0.998
Gas dividers	≤ 0.5 % max	0.98 - 1.02	≤ 2 % max	≥ 0.990
Temperatures	≤ 1 % max	0.99 - 1.01	≤ 1 % max	≥ 0.998
Pressures	≤ 1 % max	0.99 - 1.01	≤ 1 % max	≥ 0.998
PM balance	≤ 1 % max	0.99 - 1.01	≤ 1 % max	≥ 0.998

9.2.1. Linearity verification

9.2.1.1. Introduction

A linearity verification shall be performed for each measurement system listed in Table 7. At least 10 reference values, or as specified otherwise, shall be introduced to the measurement system, and the measured values shall be compared to the reference values by using a least squares linear regression in accordance with equation 13. The maximum limits in Table 9 refer to the maximum values expected during testing.

9.2.1.2. General requirements

The measurement systems shall be warmed up in accordance with the recommendations of the instrument manufacturer. The measurement systems shall be operated at their specified temperatures, pressures and flows.

9.2.1.3. Procedure

The linearity verification shall be run for each normally used operating range with the following steps.

(a) The instrument shall be set at zero by introducing a zero signal. For gas analyzers, purified synthetic air (or nitrogen) shall be introduced directly to the analyzer port.

(b) The instrument shall be spanned by introducing a span signal. For gas analyzers, an appropriate span gas shall be introduced directly to the analyzer port.

(c) The zero procedure of (a) shall be repeated.

(d) The verification shall be established by introducing at least 10 reference values (including zero) that are within the range from zero to the highest values expected during emission testing. For gas analyzers, known gas concentrations shall be introduced directly to the analyzer port.

(e) At a recording frequency of at least 1 Hz, the reference values shall be measured and the measured values recorded for 30 s.

(f) The arithmetic mean values over the 30 s period shall be used to calculate the least squares linear regression parameters in accordance with equation 13 in paragraph 7.8.8.

(g) The linear regression parameters shall meet the requirements of paragraph 9.2., Table 9.

(h) The zero setting shall be rechecked and the verification procedure repeated, if necessary.

9.3. Gaseous emissions measurement and sampling system

9.3.1. Analyzer specifications

9.3.1.1. General

The analyzers shall have a measuring range and response time appropriate for the accuracy required to measure the concentrations of the exhaust gas components under transient and steady state conditions.

The Electromagnetic Compatibility (EMC) of the equipment shall be on a level as to minimize additional errors.

Analyzers may be used, that have compensation algorithms that are functions of other measured gaseous components, and of the fuel properties for the specific engine test. Any compensation algorithm shall only provide offset compensation without affecting any gain (that is no bias).

9.3.1.2. Verifications for accuracy, repeatability, and noise

The performance values for individual instruments specified in Table 7 are the basis for the determination of the accuracy, repeatability, and noise of an instrument.

It is not required to verify instrument accuracy, repeatability, or noise. However, it may be useful to consider these verifications to define a specification for a new instrument, to verify the performance of a new instrument upon delivery, or to troubleshoot an existing instrument.

9.3.1.3. Rise time

The rise time of the analyzer installed in the measurement system shall not exceed 2.5 s.

9.3.1.4. Gas drying

Exhaust gases may be measured wet or dry. A gas-drying device, if used, shall have a minimal effect on the composition of the measured gases. It shall meet the requirements of paragraph 9.3.9.4.

The following gas-drying devices are permitted:

(a) An osmotic-membrane dryer shall meet the temperature specifications in paragraph 9.3.2.2. The dew point temperature, T_{dew}, and absolute pressure, p_{total}, downstream of an osmotic-membrane dryer shall be monitored.

(b) A thermal chiller shall meet the NO_2 loss-performance check specified in paragraph 9.3.9.4.

Chemical dryers are not permitted for removing water from the sample.

9.3.2. Gas analyzers

9.3.2.1. Introduction

Paragraphs 9.3.2.2. to 9.2.3.7. describe the measurement principles to be used. A detailed description of the measurement systems is given in Annex 3. The gases to be measured shall be analyzed with the following instruments. For non-linear analyzers, the use of linearizing circuits is permitted.

9.3.2.2. Carbon monoxide (CO) analysis

The carbon monoxide analyzer shall be of the Non-Dispersive Infrared (NDIR) absorption type.

9.3.2.3. Carbon dioxide (CO_2) analysis

The carbon dioxide analyzer shall be of the NDIR absorption type.

9.3.2.4. Hydrocarbon (HC) analysis

The hydrocarbon analyzer shall be of the Heated Flame Ionization Detector (HFID) type with detector, valves, pipework, etc. heated so as to maintain a gas temperature of 463 K ± 10 K (190 °C ± 10 °C). Optionally, for NG fuelled and PI engines, the hydrocarbon analyzer may be of the non-heated flame ionization detector (FID) type depending upon the method used (see Annex 3, paragraph A.3.1.3.).

9.3.2.5. Non-Methane Hydrocarbon (NMHC) analysis

The determination of the non-methane hydrocarbon fraction shall be performed with a heated Non-Methane Cutter (NMC) operated in line with an FID as per Annex 3, paragraph A.3.1.4. by subtraction of the methane from the hydrocarbons. For determination of NMHC and CH_4, the FID may be calibrated and spanned with CH_4 calibration gas.

9.3.2.6. Oxides of nitrogen (NO_x) analysis

Two measurement instruments are specified for NO_x measurement and either instrument may be used provided it meets the criteria specified in paragraph 9.3.2.6.1. or 9.3.2.6.2., respectively. For the determination of system equivalency of an alternate measurement procedure in accordance with paragraph 5.1.1., only the CLD is permitted.

9.3.2.6.1. Chemiluminescent Detector (CLD)

If measured on a dry basis, the oxides of nitrogen analyzer shall be of the CLD or HCLD type with a NO_2/NO converter. If measured on a wet basis, a HCLD with converter maintained above 328 K (55 °C) shall be used, provided the water quench check (see paragraph 9.3.9.2.2.) is satisfied. For both CLD and HCLD, the sampling path shall be maintained at a wall temperature of 328 K to 473 K (55 °C to 200 °C) up to the converter for dry measurement, and up to the analyzer for wet measurement.

9.3.2.6.2. Non-Dispersive Ultraviolet Detector (NDUV)

A NDUV) analyzer shall be used to measure NO_x concentration. If the NDUV analyzer measures only NO, a NO_2/NO converter shall be placed upstream of the NDUV analyzer. The NDUV temperature shall be maintained to prevent aqueous condensation, unless a sample dryer is installed upstream of the NO_2/NO converter, if used, or upstream of the analyzer.

9.3.2.7. Air to fuel measurement

The air to fuel measurement equipment used to determine the exhaust gas flow as specified in paragraph 8.4.1.6. shall be a wide range air to fuel ratio sensor or lambda sensor of Zirconia type. The sensor shall be mounted directly on the exhaust pipe where the exhaust gas temperature is high enough to eliminate water condensation.

The accuracy of the sensor with incorporated electronics shall be within:

±3 per cent of reading	for	$\lambda < 2$
±5 per cent of reading	for	$2 \leq \lambda < 5$
±10 per cent of reading	for	$5 \leq \lambda$

To fulfill the accuracy specified above, the sensor shall be calibrated as specified by the instrument manufacturer.

9.3.3. Gases

The shelf life of all gases shall be respected.

9.3.3.1. Pure gases

The required purity of the gases is defined by the contamination limits given below. The following gases shall be available for operation:

(a) For raw exhaust gas

Purified nitrogen

(Contamination ≤ 1 ppm C1, ≤ 1 ppm CO, ≤ 400 ppm CO_2, ≤ 0.1 ppm NO)

Purified oxygen

(Purity > 99.5 per cent vol O_2)

Hydrogen-helium mixture (FID burner fuel)

(40 ± 1 per cent hydrogen, balance helium)

(Contamination ≤ 1 ppm C1, ≤ 400 ppm CO_2)

Purified synthetic air

(Contamination ≤ 1 ppm C1, ≤ 1 ppm CO, ≤ 400 ppm CO_2, ≤ 0.1 ppm NO)

(Oxygen content between 18-21 per cent vol.)

(b) For dilute exhaust gas (optionally for raw exhaust gas)

Purified nitrogen

(Contamination ≤ 0.05 ppm C1, ≤ 1 ppm CO, ≤ 10 ppm CO_2, ≤ 0.02 ppm NO)

Purified oxygen

(Purity > 99.5 per cent vol O_2)

Hydrogen-helium mixture (FID burner fuel)

(40 ± 1 per cent hydrogen, balance helium)

(Contamination ≤ 0.05 ppm C1, ≤ 10 ppm CO_2)

Purified synthetic air

(Contamination ≤ 0.05 ppm C1, ≤ 1 ppm CO, ≤ 10 ppm CO_2, ≤ 0.02 ppm NO)

(Oxygen content between 20.5 - 21.5 per cent vol.)

If gas bottles are not available, a gas purifier may be used, if contamination levels can be demonstrated.

9.3.3.2. Calibration and span gases

Mixtures of gases having the following chemical compositions shall be available, if applicable. Other gas combinations are allowed provided the gases do not react with one another. The expiration date of the calibration gases stated by the manufacturer shall be recorded.

C_3H_8 and purified synthetic air (see paragraph 9.3.3.1.);

CO and purified nitrogen;

NO and purified nitrogen;

NO_2 and purified synthetic air;

CO_2 and purified nitrogen;

CH_4 and purified synthetic air;

C_2H_6 and purified synthetic air.

The true concentration of a calibration and span gas shall be within ±1 per cent of the nominal value, and shall be traceable to national or international standards. All concentrations of calibration gas shall be given on a volume basis (volume percent or volume ppm).

9.3.3.3. Gas dividers

The gases used for calibration and span may also be obtained by means of gas dividers (precision blending devices), diluting with purified N_2 or with purified synthetic air. Critical-flow gas dividers, capillary-tube gas dividers, or thermal-mass-meter gas dividers may be used. Viscosity corrections shall be applied as necessary (if not done by gas divider internal software) to appropriately ensure correct gas division. The accuracy of the gas divider shall be such that the concentration of the blended calibration gases is accurate to within ±2 per cent. This accuracy implies that primary gases used for blending shall be known to an accuracy of at least ±1 per cent, traceable to national or international gas standards.

The gas divider system shall meet the linearity verification in paragraph 9.2., Table 9. Optionally, the blending device may be checked with an instrument which by nature is linear, e.g. using NO gas with a CLD. The span value of the instrument shall be adjusted with the span gas directly connected to the instrument. The gas divider shall be checked at the settings used and the nominal value shall be compared to the measured concentration of the instrument.

9.3.3.4. Oxygen interference check gases

Oxygen interference check gases are a blend of propane, oxygen and nitrogen. They shall contain propane with 350 ppm C ± 75 ppm C hydrocarbon. The concentration value shall be determined to calibration gas tolerances by chromatographic analysis of total hydrocarbons plus impurities or by dynamic blending. The oxygen concentrations required for positive ignition and compression ignition engine testing are listed in Table 10 with the remainder being purified nitrogen.

Table 10
Oxygen interference check gases

Type of engine	*O_2 concentration (per cent)*
Compression ignition	21 (20 to 22)
Compression and positive ignition	10 (9 to 11)
Compression and positive ignition	5 (4 to 6)
Positive ignition	0 (0 to 1)

9.3.4. Vacuum-side leak check

Upon initial sampling system installation, after major maintenance such as pre-filter changes, and within 8 hours prior to each test sequence, it shall be verified that there are no significant vacuum-side leaks using one of the leak tests described in this paragraph. This verification does not apply to any full-flow portion of a CVS dilution system.

A leak may be detected either by measuring a small amount of flow when there shall be zero flow, by measuring the pressure increase of an evacuated system, or by detecting the dilution of a known concentration of span gas when it flows through the vacuum side of a sampling system.

9.3.4.1. Low-flow leak test

The probe shall be disconnected from the exhaust system and the end plugged. The analyzer pump shall be switched on. After an initial stabilization period all flowmeters will read approximately zero in the absence of a leak. If not, the sampling lines shall be checked and the fault corrected.

The maximum allowable leakage rate on the vacuum side shall be 0.5 per cent of the in-use flow rate for the portion of the system being checked. The analyzer flows and bypass flows may be used to estimate the in-use flow rates.

9.3.4.2. Vacuum-decay leak test

The system shall be evacuated to a pressure of at least 20 kPa vacuum (80 kPa absolute) and the leak rate of the system shall be observed as a decay in the applied vacuum. To perform this test the vacuum-side volume of the sampling system shall be known to within ±10 per cent of its true volume.

After an initial stabilization period the pressure increase Δp (kPa/min) in the system shall not exceed:

$$\Delta p = p / V_s \times 0.005 \times q_{vs} \quad (75)$$

Where:

V_s is the system volume, l

q_{vs} is the system flow rate, l/min

9.3.4.3. Dilution-of-span-gas leak test

A gas analyzer shall be prepared as it would be for emission testing. Span gas shall be supplied to the analyzer port and it shall be verified that the span gas concentration is measured within its expected measurement accuracy and repeatability. Overflow span gas shall be routed to either the end of the sample probe, the open end of the transfer line with the sample probe disconnected, or a three-way valve installed in-line between a probe and its transfer line.

It shall be verified that the measured overflow span gas concentration is within ±0.5 per cent of the span gas concentration. A measured value lower than expected indicates a leak, but a value higher than expected may indicate a problem with the span gas or the analyzer itself. A measured value higher than expected does not indicate a leak.

9.3.5. Response time check of the analytical system

The system settings for the response time evaluation shall be exactly the same as during measurement of the test run (i.e. pressure, flow rates, filter settings on the analyzers and all other response time influences). The response time determination shall be done with gas switching directly at the inlet of the sample probe. The gas switching shall be done in less than 0.1 s. The gases used for the test shall cause a concentration change of at least 60 per cent Full Scale (FS).

The concentration trace of each single gas component shall be recorded. The response time is defined to be the difference in time between the gas switching and the appropriate change of the recorded concentration. The system response time (t_{90}) consists of the delay time to the measuring detector and the rise time of the detector. The delay time is defined as the time from the change (t_0) until the response is 10 per cent of the final reading (t_{10}). The rise time is defined as the time between 10 per cent and 90 per cent response of the final reading ($t_{90} - t_{10}$).

For time alignment of the analyzer and exhaust flow signals, the transformation time is defined as the time from the change (t_0) until the response is 50 per cent of the final reading (t_{50}).

The system response time shall be ≤ 10 s with a rise time of ≤ 2.5 s in accordance with paragraph 9.3.1.7. for all limited components (CO, NO_x, HC or NMHC) and all ranges used. When using a NMC for the measurement of NMHC, the system response time may exceed 10 s.

9.3.6. Efficiency test of NO_x converter

The efficiency of the converter used for the conversion of NO_2 into NO is tested as given in paragraphs 9.3.6.1 to 9.3.6.8 (see Figure 8).

Figure 8
Scheme of NO_2 converter efficiency device

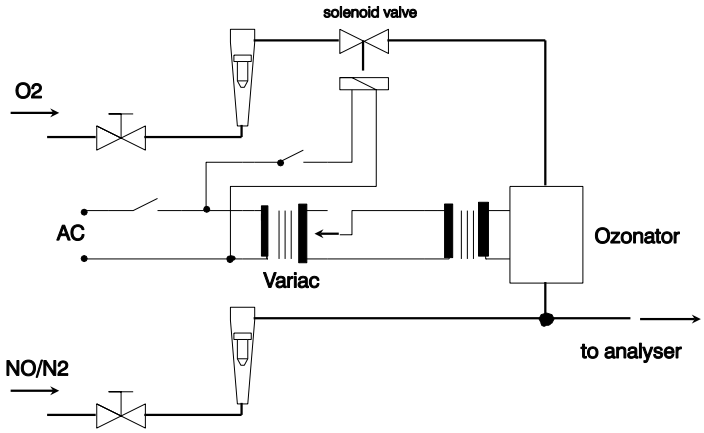

9.3.6.1. Test setup

Using the test setup as schematically shown in Figure 8 and the procedure below, the efficiency of the converter shall be tested by means of an ozonator.

9.3.6.2. Calibration

The CLD and the HCLD shall be calibrated in the most common operating range following the manufacturer's specifications using zero and span gas (the NO content of which shall amount to about 80 per cent of the operating range and the NO_2 concentration of the gas mixture to less than 5 per cent of the NO concentration). The NO_x analyzer shall be in the NO mode so that the span gas does not pass through the converter. The indicated concentration has to be recorded.

9.3.6.3. Calculation

The per cent efficiency of the converter shall be calculated as follows:

$$E_{\mathrm{NOx}} = \left(1 + \frac{a-b}{c-d}\right) \times 100 \qquad (76)$$

Where:

a is the NO_x concentration in accordance with paragraph 9.3.6.6.

b is the NO_x concentration in accordance with paragraph 9.3.6.7.

c is the NO concentration in accordance with paragraph 9.3.6.4.

d is the NO concentration in accordance with paragraph 9.3.6.5.

9.3.6.4. Adding of oxygen

Via a T-fitting, oxygen or zero air shall be added continuously to the gas flow until the concentration indicated is about 20 per cent less than the indicated calibration concentration given in paragraph 9.3.6.2. (the analyzer is in the NO mode).

The indicated concentration (*c*) shall be recorded. The ozonator is kept deactivated throughout the process.

9.3.6.5. Activation of the ozonator

The ozonator shall be activated to generate enough ozone to bring the NO concentration down to about 20 per cent (minimum 10 per cent) of the calibration concentration given in paragraph 9.3.6.2. The indicated concentration (*d*) shall be recorded (the analyzer is in the NO mode).

9.3.6.6. NO_x mode

The NO analyzer shall be switched to the NO_x mode so that the gas mixture (consisting of NO, NO_2, O_2 and N_2) now passes through the converter. The indicated concentration (*a*) shall be recorded (the analyzer is in the NO_x mode).

9.3.6.7. Deactivation of the ozonator

The ozonator is now deactivated. The mixture of gases described in paragraph 9.3.6.6. passes through the converter into the detector. The indicated concentration (*b*) shall be recorded (the analyzer is in the NO_x mode).

9.3.6.8. NO mode

Switched to NO mode with the ozonator deactivated, the flow of oxygen or synthetic air shall be shut off. The NO_x reading of the analyzer shall not deviate by more than ±5 per cent from the value measured in accordance with paragraph 9.3.6.2. (the analyzer is in the NO mode).

9.3.6.9. Test interval

The efficiency of the converter shall be tested at least once per month.

9.3.6.10. Efficiency requirement

The efficiency of the converter E_{NOx} shall not be less than 95 per cent.

If, with the analyzer in the most common range, the ozonator cannot give a reduction from 80 per cent to 20 per cent in accordance with paragraph 9.3.6.5., the highest range which will give the reduction shall be used.

9.3.7. Adjustment of the FID

9.3.7.1. Optimization of the detector response

The FID shall be adjusted as specified by the instrument manufacturer. A propane in air span gas shall be used to optimize the response on the most common operating range.

With the fuel and airflow rates set at the manufacturer's recommendations, a 350 ± 75 ppm C span gas shall be introduced to the analyzer. The response at a given fuel flow shall be determined from the difference between the span gas response and the zero gas response. The fuel flow shall be incrementally adjusted above and below the manufacturer's specification. The span and zero response at these fuel flows shall be recorded. The difference between the span and zero response shall be plotted and the fuel flow adjusted to the rich side of the curve. This is the initial flow rate setting which may need further optimization depending on the results of the hydrocarbon response factors and the oxygen interference check in accordance with paragraphs 9.3.7.2. and 9.3.7.3. If the oxygen interference or the hydrocarbon response factors do not meet the following specifications, the airflow shall be incrementally adjusted above and below the manufacturer's specifications, repeating paragraphs 9.3.7.2. and 9.3.7.3. for each flow.

The optimization may optionally be conducted using the procedures outlined in SAE paper No. 770141.

9.3.7.2. Hydrocarbon response factors

A linearity verification of the analyzer shall be performed using propane in air and purified synthetic air in accordance with paragraph 9.2.1.3.

Response factors shall be determined when introducing an analyzer into service and after major service intervals. The response factor (r_h) for a particular hydrocarbon species is the ratio of the FID C1 reading to the gas concentration in the cylinder expressed by ppm C1.

The concentration of the test gas shall be at a level to give a response of approximately 80 per cent of full scale. The concentration shall be known to an accuracy of ±2 per cent in reference to a gravimetric standard expressed in volume. In addition, the gas cylinder shall be preconditioned for 24 hours at a temperature of 298 K ± 5 K (25 °C ± 5 °C).

The test gases to be used and the relative response factor ranges are as follows:

(a) Methane and purified synthetic air $1.00 \leq r_h \leq 1.15$

(b) Propylene and purified synthetic air $0.90 \leq r_h \leq 1.1$

(c) Toluene and purified synthetic air $0.90 \leq r_h \leq 1.1$

These values are relative to a r_h of 1 for propane and purified synthetic air.

9.3.7.3. Oxygen interference check

For raw exhaust gas analyzers only, the oxygen interference check shall be performed when introducing an analyzer into service and after major service intervals.

A measuring range shall be chosen where the oxygen interference check gases will fall in the upper 50 per cent. The test shall be conducted with the oven temperature set as required. Oxygen interference check gas specifications are found in paragraph 9.3.3.4.

(a) The analyzer shall be set at zero,

(b) The analyzer shall be spanned with the 0 per cent oxygen blend for positive ignition engines. Compression ignition engine instruments shall be spanned with the 21 per cent oxygen blend.

(c) The zero response shall be rechecked. If it has changed by more than 0.5 per cent of full scale, steps (a) and (b) of this paragraph shall be repeated.

(d) The 5 per cent and 10 per cent oxygen interference check gases shall be introduced.

(e) The zero response shall be rechecked. If it has changed by more than ±1 per cent of full scale, the test shall be repeated.

(f) The oxygen interference E_{O2} shall be calculated for each mixture in step (d) as follows:

$$E_{O2} = (c_{ref,d} - c) \times 100 / c_{ref,d} \qquad (77)$$

With the analyzer response being

$$c = \frac{c_{\text{ref,b}} \times c_{\text{FS,b}}}{c_{\text{m,b}}} \times \frac{c_{\text{m,d}}}{c_{\text{FS,d}}} \quad (78)$$

Where:

$c_{\text{ref,b}}$ is the reference HC concentration in step (b), ppm C

$c_{\text{ref,d}}$ is the reference HC concentration in step (d), ppm C

$c_{\text{FS,b}}$ is the full scale HC concentration in step (b), ppm C

$c_{\text{FS,d}}$ is the full scale HC concentration in step (d), ppm C

$c_{\text{m,b}}$ is the measured HC concentration in step (b), ppm C

$c_{\text{m,d}}$ is the measured HC concentration in step (d), ppm C

(g) The oxygen interference E_{O2} shall be less than ±1.5 per cent for all required oxygen interference check gases prior to testing.

(h) If the oxygen interference E_{O2} is greater than ±1.5 per cent, corrective action may be taken by incrementally adjusting the airflow above and below the manufacturer's specifications, the fuel flow and the sample flow.

(i) The oxygen interference shall be repeated for each new setting.

9.3.8. Efficiency of the Non-Methane Cutter (NMC)

The NMC is used for the removal of the non-methane hydrocarbons from the sample gas by oxidizing all hydrocarbons except methane. Ideally, the conversion for methane is 0 per cent, and for the other hydrocarbons represented by ethane is 100 per cent. For the accurate measurement of NMHC, the two efficiencies shall be determined and used for the calculation of the NMHC emission mass flow rate (see paragraph 8.6.2.).

It is recommended that a non-methane cutter is optimized by adjusting its temperature to achieve an $E_M < 0.15$ and an $E_E > 0.98$ as determined by paragraphs 9.3.8.1. and 9.3.8.2., as applicable. If adjusting NMC temperature does not result in achieving these specifications, it is recommended that the catalyst material is replaced.

9.3.8.1. Methane efficiency

Methane calibration gas shall be flown through the FID with and without bypassing the NMC and the two concentrations recorded. The efficiency shall be determined as follows:

$$E_M = 1 - \frac{c_{\text{HC(w/NMC)}}}{c_{\text{HC(w/o NMC)}}} \quad (79)$$

Where:

$c_{\text{HC(w/NMC)}}$ is the HC concentration with CH_4 flowing through the NMC, ppm C

$c_{\text{HC(w/o NMC)}}$ is the HC concentration with CH_4 bypassing the NMC, ppm C

9.3.8.2. Ethane efficiency

Ethane calibration gas shall be flown through the FID with and without bypassing the NMC and the two concentrations recorded. The efficiency shall be determined as follows:

$$E_E = 1 - \frac{c_{HC(w/NMC)}}{c_{HC(w/o\ NMC)}} \quad (80)$$

Where:

$c_{HC(w/NMC)}$ is the HC concentration with C_2H_6 flowing through the NMC, ppm C

$c_{HC(w/o\ NMC)}$ is the HC concentration with C_2H_6 bypassing the NMC, ppm C

9.3.9. Interference effects

Other gases than the one being analyzed can interfere with the reading in several ways. Positive interference occurs in NDIR instruments where the interfering gas gives the same effect as the gas being measured, but to a lesser degree. Negative interference occurs in NDIR instruments by the interfering gas broadening the absorption band of the measured gas, and in CLD instruments by the interfering gas quenching the reaction. The interference checks in paragraphs 9.3.9.1. and 9.3.9.3. shall be performed prior to an analyzer's initial use and after major service intervals.

9.3.9.1. CO analyzer interference check

Water and CO_2 can interfere with the CO analyzer performance. Therefore, a CO_2 span gas having a concentration of 80 to 100 per cent of full scale of the maximum operating range used during testing shall be bubbled through water at room temperature and the analyzer response recorded. The analyzer response shall not be more than 2 per cent of the mean CO concentration expected during testing.

Interference procedures for CO_2 and H_2O may also be run separately. If the CO_2 and H_2O levels used are higher than the maximum levels expected during testing, each observed interference value shall be scaled down by multiplying the observed interference by the ratio of the maximum expected concentration value to the actual value used during this procedure. Separate interference procedures concentrations of H_2O that are lower than the maximum levels expected during testing may be run, but the observed H_2O interference shall be scaled up by multiplying the observed interference by the ratio of the maximum expected H_2O concentration value to the actual value used during this procedure. The sum of the two scaled interference values shall meet the tolerance specified in this paragraph.

9.3.9.2. NO_x analyzer quench checks for Chemi-Luminescence Detector (CLD) analyzer

The two gases of concern for CLD (and HCLD) analyzers are CO_2 and water vapour. Quench responses to these gases are proportional to their concentrations, and therefore require test techniques to determine the quench at the highest expected concentrations experienced during testing. If the CLD analyzer uses quench compensation algorithms that utilize H_2O and/or CO_2 measurement instruments, quench shall be evaluated with these instruments active and with the compensation algorithms applied.

9.3.9.2.1. CO_2 quench check

A CO_2 span gas having a concentration of 80 to 100 per cent of full scale of the maximum operating range shall be passed through the NDIR analyzer and the CO_2 value recorded as *A*. It shall then be diluted approximately 50 per cent with NO span gas and passed through the NDIR and CLD, with the CO_2 and NO values recorded as *B* and *C*, respectively. The CO_2 shall then be shut off and only the NO span gas be passed through the (H)CLD and the NO value recorded as *D*.

The per cent quench shall be calculated as follows:

$$E_{CO2} = \left[1 - \left(\frac{(C \times A)}{(D \times A) - (D \times B)}\right)\right] \times 100 \qquad (81)$$

Where:

A is the undiluted CO_2 concentration measured with NDIR, per cent

B is the diluted CO_2 concentration measured with NDIR, per cent

C is the diluted NO concentration measured with (H)CLD, ppm

D is the undiluted NO concentration measured with (H)CLD, ppm

Alternative methods of diluting and quantifying of CO_2 and NO span gas values such as dynamic mixing/blending are permitted with the approval of the Type Approval or certification Authority.

9.3.9.2.2. Water quench check

This check applies to wet gas concentration measurements only. Calculation of water quench shall consider dilution of the NO span gas with water vapour and scaling of water vapour concentration of the mixture to that expected during testing.

A NO span gas having a concentration of 80 per cent to 100 per cent of full scale of the normal operating range shall be passed through the (H) CLD and the NO value recorded as *D*. The NO span gas shall then be bubbled through water at room temperature and passed through the (H) CLD and the NO value recorded as *C*. The water temperature shall be determined and recorded as *F*. The mixture's saturation vapour pressure that corresponds to the bubbler water temperature (*F*) shall be determined and recorded as *G*.

The water vapour concentration (in per cent) of the mixture shall be calculated as follows:

$$H = 100 \times (G / p_b) \qquad (82)$$

and recorded as *H*. The expected diluted NO span gas (in water vapour) concentration shall be calculated as follows:

$$D_e = D \times (1 - H / 100) \qquad (83)$$

and recorded as D_e. For diesel exhaust, the maximum exhaust water vapour concentration (in per cent) expected during testing shall be estimated, under the assumption of a fuel H/C ratio of 1.8/1, from the maximum CO_2 concentration in the exhaust gas *A* as follows:

$$H_m = 0.9 \times A \qquad (84)$$

And recorded as H_m

The per cent water quench shall be calculated as follows:

$$E_{H2O} = 100 \times ((D_e - C) / D_e) \times (H_m / H) \quad (85)$$

Where:

D_e is the expected diluted NO concentration, ppm

C is the measured diluted NO concentration, ppm

H_m is the maximum water vapour concentration, per cent

H is the actual water vapour concentration, per cent

9.3.9.2.3. Maximum allowable quench

The combined CO_2 and water quench shall not exceed 2 per cent of the NO_x concentration expected during testing.

9.3.9.3. NO_x analyzer quench check for NDUV analyzer

Hydrocarbons and H_2O can positively interfere with a NDUV analyzer by causing a response similar to NO_x. If the NDUV analyzer uses compensation algorithms that utilize measurements of other gases to meet this interference verification, simultaneously such measurements shall be conducted to test the algorithms during the analyzer interference verification.

9.3.9.3.1. Procedure

The NDUV analyzer shall be started, operated, zeroed, and spanned in accordance with the instrument manufacturer's instructions. It is recommended to extract engine exhaust to perform this verification. A CLD shall be used to quantify NO_x in the exhaust. The CLD response shall be used as the reference value. Also HC shall be measured in the exhaust with a FID analyzer. The FID response shall be used as the reference hydrocarbon value.

Upstream of any sample dryer, if used during testing, the engine exhaust shall be introduced into the NDUV analyzer. Time shall be allowed for the analyzer response to stabilize. Stabilization time may include time to purge the transfer line and to account for analyzer response. While all analyzers measure the sample's concentration, 30 s of sampled data shall be recorded, and the arithmetic means for the three analyzers calculated.

The CLD mean value shall be subtracted from the NDUV mean value. This difference shall be multiplied by the ratio of the expected mean HC concentration to the HC concentration measured during the verification, as follows:

$$E_{HC/H2O} = \left(c_{NOx,CLD} - c_{NOx,NDUV}\right) \times \left(\frac{c_{HC,e}}{c_{HC,m}}\right) \quad (86)$$

Where:

$c_{NOx,CLD}$ is the measured NO_x concentration with CLD, ppm

$c_{NOx,NDUV}$ is the measured NO_x concentration with NDUV, ppm

$c_{HC,e}$ is the expected max. HC concentration, ppm

$c_{HC,e}$ is the measured HC concentration, ppm

9.3.9.3.2. Maximum allowable quench

The combined HC and water quench shall not exceed 2 per cent of the NO_x concentration expected during testing.

9.3.9.4. Sample dryer

A sample dryer removes water, which can otherwise interfere with a NO_x measurement.

9.3.9.4.1. Sample dryer efficiency

For dry CLD analyzers, it shall be demonstrated that for the highest expected water vapour concentration H_m (see paragraph 9.3.9.2.2.), the sample dryer maintains CLD humidity at ≤5 g water/kg dry air (or about 0.008 per cent H_2O), which is 100 per cent relative humidity at 3.9 °C and 101.3 kPa. This humidity specification is also equivalent to about 25 per cent relative humidity at 25 °C and 101.3 kPa. This may be demonstrated by measuring the temperature at the outlet of a thermal dehumidifier, or by measuring humidity at a point just upstream of the CLD. Humidity of the CLD exhaust might also be measured as long as the only flow into the CLD is the flow from the dehumidifier.

9.3.9.4.2. Sample dryer NO_2 penetration

Liquid water remaining in an improperly designed sample dryer can remove NO_2 from the sample. If a sample dryer is used without an NO_2/NO converter upstream, it could therefore remove NO_2 from the sample prior to NO_x measurement.

The sample dryer shall allow for measuring at least 95 per cent of the total NO_2 at the maximum expected concentration of NO_2.

The following procedure shall be used to verify sample dryer performance:

NO_2 calibration gas that has an NO_2 concentration that is near the maximum expected during testing shall be overflowed at the gas sampling system's probe or overflow fitting. Time shall be allowed for stabilization of the total NO_x response, accounting only for transport delays and instrument response. The mean of 30 s of recorded total NO_x data shall be calculated and this value recorded as c_{NOxref} and the NO_2 calibration gas be stopped

The sampling system shall be saturated by overflowing a dew point generator's output, set at a dew point of 50 °C, to the gas sampling system's probe or overflow fitting. The dew point generator's output shall be sampled through the sampling system and sample dryer for at least 10 minutes until the sample dryer is expected to be removing a constant rate of water.

The sampling system shall be immediately switched back to overflowing the NO_2 calibration gas used to establish c_{NOxref}. It shall be allowed for stabilization of the total NO_x response, accounting only for transport delays and instrument response. The mean of 30 s of recorded total NO_x data shall be calculated and this value recorded as $c_{NOxmeas}$.

$c_{NOxmeas}$ shall be corrected to c_{NOxdry} based upon the residual water vapour that passed through the sample dryer at the sample dryer's outlet temperature and pressure.

If c_{NOxdry} is less than 95 per cent of c_{NOxref}, the sample dryer shall be repaired or replaced .

9.3.10. Sampling for raw gaseous emissions, if applicable

The gaseous emissions sampling probes shall be fitted at least 0.5 m or 3 times the diameter of the exhaust pipe - whichever is the larger - upstream of the exit of the exhaust gas system but sufficiently close to the engine as to ensure an exhaust gas temperature of at least 343 K (70 °C) at the probe.

In the case of a multi-cylinder engine with a branched exhaust manifold, the inlet of the probe shall be located sufficiently far downstream so as to ensure that the sample is representative of the average exhaust emissions from all cylinders. In multi-cylinder engines having distinct groups of manifolds, such as in a "Vee" engine configuration, it is recommended to combine the manifolds upstream of the sampling probe. If this is not practical, it is permissible to acquire a sample from the group with the highest CO_2 emission. For exhaust emission calculation the total exhaust mass flow shall be used.

If the engine is equipped with an exhaust after-treatment system, the exhaust sample shall be taken downstream of the exhaust after-treatment system.

9.3.11. Sampling for dilute gaseous emissions, if applicable

The exhaust pipe between the engine and the full flow dilution system shall conform to the requirements laid down in Annex 3. The gaseous emissions sample probe(s) shall be installed in the dilution tunnel at a point where the diluent and exhaust gas are well mixed, and in close proximity to the particulates sampling probe.

Sampling can generally be done in two ways:

(a) The emissions are sampled into a sampling bag over the cycle and measured after completion of the test; for HC, the sample bag shall be heated to 464 K ± 11 K (191 °C ± 11 °C), for NO_x, the sample bag temperature shall be above the dew point temperature;

(b) The emissions are sampled continuously and integrated over the cycle.

The background concentrations shall be sampled upstream of the dilution tunnel into a sampling bag, and shall be subtracted from the emissions concentration in accordance with paragraph 8.5.2.3.2.

9.4. Particulate measurement and sampling system

9.4.1. General specifications

To determine the mass of the particulates, a particulate dilution and sampling system, a particulate sampling filter, a microgram balance, and a temperature and humidity controlled weighing chamber, are required. The particulate sampling system shall be designed to ensure a representative sample of the particulates proportional to the exhaust flow.

9.4.2. General requirements of the dilution system

The determination of the particulates requires dilution of the sample with filtered ambient air, synthetic air or nitrogen (the diluent). The dilution system shall be set as follows:

(a) Completely eliminate water condensation in the dilution and sampling systems,

(b) Maintain the temperature of the diluted exhaust gas between 315 K (42 °C) and 325 K (52 °C) within 20 cm upstream or downstream of the filter holder(s),

(c) The diluent temperature shall be between 293 K and 325 K (20 °C to 42 °C) in close proximity to the entrance into the dilution tunnel; within the specified range, Contracting Parties may require tighter specifications for engines to be type approved or certified in their territory,

(d) The minimum dilution ratio shall be within the range of 5:1 to 7:1 and at least 2:1 for the primary dilution stage based on the maximum engine exhaust flow rate,

(e) For a partial flow dilution system, the residence time in the system from the point of diluent introduction to the filter holder(s) shall be between 0.5 and 5 seconds,

(f) For a full flow dilution system, the overall residence time in the system from the point of diluent introduction to the filter holder(s) shall be between 1 and 5 seconds, and the residence time in the secondary dilution system, if used, from the point of secondary diluent introduction to the filter holder(s) shall be at least 0.5 seconds.

Dehumidifying the diluent before entering the dilution system is permitted, and especially useful if diluent humidity is high.

9.4.3. Particulate sampling

9.4.3.1. Partial flow dilution system

The particulate sampling probe shall be installed in close proximity to the gaseous emissions sampling probe, but sufficiently distant as to not cause interference. Therefore, the installation provisions of paragraph 9.3.10. also apply to particulate sampling. The sampling line shall conform to the requirements laid down in Annex 3.

In the case of a multi-cylinder engine with a branched exhaust manifold, the inlet of the probe shall be located sufficiently far downstream so as to ensure that the sample is representative of the average exhaust emissions from all cylinders. In multi-cylinder engines having distinct groups of manifolds, such as in a "Vee" engine configuration, it is recommended to combine the manifolds upstream of the sampling probe. If this is not practical, it is permissible to acquire a sample from the group with the highest particulate emission. For exhaust emission calculation the total exhaust mass flow of the manifold shall be used.

9.4.3.2. Full flow dilution system

The particulate sampling probe shall be installed in close proximity to the gaseous emissions sampling probe, but sufficiently distant as to not cause interference, in the dilution tunnel. Therefore, the installation provisions of paragraph 9.3.11. also apply to particulate sampling. The sampling line shall conform to the requirements laid down in Annex 3.

9.4.4. Particulate sampling filters

The diluted exhaust shall be sampled by a filter that meets the requirements of paragraphs 9.4.4.1. to 9.4.4.3. during the test sequence.

9.4.4.1. Filter specification

All filter types shall have a 0.3 µm DOP (di-octylphthalate) collection efficiency of at least 99 per cent. The filter material shall be either:

(a) Fluorocarbon (PTFE) coated glass fiber, or

(b) Fluorocarbon (PTFE) membrane.

9.4.4.2. Filter size

The filter shall be circular with a nominal diameter of 47 mm (tolerance of 46.50 ± 0.6 mm) and an exposed diameter (filter stain diameter) of at least 38 mm.

9.4.4.3. Filter face velocity

The face velocity through the filter shall be between 0.90 and 1.00 m/s with less than 5 per cent of the recorded flow values exceeding this range. If the total PM mass on the filter exceeds 400 µg, the filter face velocity may be reduced to 0.50 m/s. The face velocity shall be calculated as the volumetric flow rate of the sample at the pressure upstream of the filter and temperature of the filter face, divided by the filter's exposed area.

9.4.5. Weighing chamber and analytical balance specifications

The chamber (or room) environment shall be free of any ambient contaminants (such as dust, aerosol, or semi-volatile material) that could contaminate the particulate filters. The weighing room shall meet the required specifications for at least 60 minutes before weighing filters.

9.4.5.1. Weighing chamber conditions

The temperature of the chamber (or room) in which the particulate filters are conditioned and weighed shall be maintained to within 295 K ± 1 K (22 °C ± 1 °C) during all filter conditioning and weighing. The humidity shall be maintained to a dew point of 282.5 K ± 1 K (9.5 °C ± 1 °C).

If the stabilization and weighing environments are separate, the temperature of the stabilization environment shall be maintained at a tolerance of 295 K ± 3 K (22 °C ± 3 °C), but the dew point requirement remains at 282.5 K ± 1 K (9.5 °C ± 1 °C).

Humidity and ambient temperature shall be recorded.

9.4.5.2. Reference filter weighing

At least two unused reference filters shall be weighed within 80 hours of, but preferably at the same time as the sample filter weighing. They shall be the same material as the sample filters. Buoyancy correction shall be applied to the weighings.

If the weight of any of the reference filters changes between sample filter weighings by more than 10 µg or ±10 per cent of the expected total PM mass, whichever is higher, all sample filters shall be discarded and the emissions test repeated.

The reference filters shall be periodically replaced based on good engineering judgement, but at least once per year.

9.4.5.3. Analytical balance

The analytical balance used to determine the filter weight shall meet the linearity verification criterion of paragraph 9.2., Table 9. This implies a precision of at least 0.5 µg and a resolution of at least 1 µg (1 digit = 1 µg).

In order to ensure accurate filter weighing, the balance shall be installed as follows:

(a) Installed on a vibration-isolation platform to isolate it from external noise and vibration,

(b) Shielded from convective airflow with a static-dissipating draft shield that is electrically grounded.

9.4.5.4. Elimination of static electricity effects

The filter shall be neutralized prior to weighing, e.g. by a Polonium neutralizer or a device of similar effect. If a PTFE membrane filter is used, the static electricity shall be measured and is recommended to be within ±2.0 V of neutral.

Static electric charge shall be minimized in the balance environment. Possible methods are as follows:

(a) The balance shall be electrically grounded,

(b) Stainless steel tweezers shall be used if PM samples are handled manually,

(c) Tweezers shall be grounded with a grounding strap, or a grounding strap shall be provided for the operator such that the grounding strap shares a common ground with the balance. Grounding straps shall have an appropriate resistor to protect operators from accidental shock.

9.4.5.5. Additional specifications

All parts of the dilution system and the sampling system from the exhaust pipe up to the filter holder, which are in contact with raw and diluted exhaust gas, shall be designed to minimize deposition or alteration of the particulates. All parts shall be made of electrically conductive materials that do not react with exhaust gas components, and shall be electrically grounded to prevent electrostatic effects.

9.4.5.6. Calibration of the flow measurement instrumentation

Each flowmeter used in a particulate sampling and partial flow dilution system shall be subjected to the linearity verification, as described in paragraph 9.2.1., as often as necessary to fulfil the accuracy requirements of this gtr. For the flow reference values, an accurate flowmeter traceable to international and/or national standards shall be used. For differential flow measurement calibration see paragraph 9.4.6.2.

9.4.6. Special requirements for the partial flow dilution system

The partial flow dilution system has to be designed to extract a proportional raw exhaust sample from the engine exhaust stream, thus responding to excursions in the exhaust stream flow rate. For this it is essential that the dilution ratio or the sampling ratio r_d or r_s be determined such that the accuracy requirements of paragraph 9.4.6.2. are fulfilled.

9.4.6.1. System response time

For the control of a partial flow dilution system, a fast system response is required. The transformation time for the system shall be determined by the procedure in paragraph 9.4.6.6. If the combined transformation time of the exhaust flow measurement (see paragraph 8.4.1.2.) and the partial flow system is ≤ 0.3 s, online control shall be used. If the transformation time exceeds 0.3 s, look ahead control based on a pre-recorded test run shall be used. In this case, the combined rise time shall be ≤ 1 s and the combined delay time ≤ 10 s.

The total system response shall be designed as to ensure a representative sample of the particulates, $q_{mp,i}$, proportional to the exhaust mass flow. To determine the proportionality, a regression analysis of $q_{mp,i}$ versus $q_{mew,i}$ shall be conducted on a minimum 5 Hz data acquisition rate, and the following criteria shall be met:

(a) The coefficient of determination r^2 of the linear regression between $q_{mp,i}$ and $q_{mew,i}$ shall not be less than 0.95,

(b) The standard error of estimate of $q_{mp,i}$ on $q_{mew,i}$ shall not exceed 5 per cent of q_{mp} maximum,

(c) q_{mp} intercept of the regression line shall not exceed ±2 per cent of q_{mp} maximum.

Look-ahead control is required if the combined transformation times of the particulate system, $t_{50,P}$ and of the exhaust mass flow signal, $t_{50,F}$ are > 0.3 s. In this case, a pre-test shall be run, and the exhaust mass flow signal of the pre-test be used for controlling the sample flow into the particulate system. A correct control of the partial dilution system is obtained, if the time trace of $q_{mew,pre}$ of the pre-test, which controls q_{mp}, is shifted by a "look-ahead" time of $t_{50,P} + t_{50,F}$.

For establishing the correlation between $q_{mp,i}$ and $q_{mew,i}$ the data taken during the actual test shall be used, with $q_{mew,i}$ time aligned by $t_{50,F}$ relative to $q_{mp,i}$ (no contribution from $t_{50,P}$ to the time alignment). That is, the time shift between q_{mew} and q_{mp} is the difference in their transformation times that were determined in paragraph 9.4.6.6.

9.4.6.2. Specifications for differential flow measurement

For partial flow dilution systems, the accuracy of the sample flow q_{mp} is of special concern, if not measured directly, but determined by differential flow measurement:

$$q_{mp} = q_{mdew} - q_{mdw} \quad (87)$$

In this case, the maximum error of the difference shall be such that the accuracy of q_{mp} is within ±5 per cent when the dilution ratio is less than 15. It can be calculated by taking root-mean-square of the errors of each instrument.

Acceptable accuracies of q_{mp} can be obtained by either of the following methods:

(a) The absolute accuracies of q_{mdew} and q_{mdw} are ±0.2 per cent which guarantees an accuracy of q_{mp} of ≤ 5 per cent at a dilution ratio of 15. However, greater errors will occur at higher dilution ratios.

(b) Calibration of q_{mdw} relative to q_{mdew} is carried out such that the same accuracies for q_{mp} as in (a) are obtained. For details see paragraph 9.4.6.2.

(c) The accuracy of q_{mp} is determined indirectly from the accuracy of the dilution ratio as determined by a tracer gas, e.g. CO_2. Accuracies equivalent to method (a) for q_{mp} are required.

(d) The absolute accuracy of q_{mdew} and q_{mdw} is within ±2 per cent of full scale, the maximum error of the difference between q_{mdew} and q_{mdw} is within 0.2 per cent, and the linearity error is within ±0.2 per cent of the highest q_{mdew} observed during the test.

9.4.6.3. Calibration of differential flow measurement

The flowmeter or the flow measurement instrumentation shall be calibrated in one of the following procedures, such that the probe flow q_{mp} into the tunnel shall fulfil the accuracy requirements of paragraph 9.4.6.2.:

(a) The flowmeter for q_{mdw} shall be connected in series to the flowmeter for q_{mdew}, the difference between the two flowmeters shall be calibrated for at least 5 set points with flow values equally spaced between the lowest q_{mdw} value used during the test and the value of q_{mdew} used during the test. The dilution tunnel may be bypassed.

(b) A calibrated flow device shall be connected in series to the flowmeter for q_{mdew} and the accuracy shall be checked for the value used for the test. The calibrated flow device shall be connected in series to the flowmeter for q_{mdw}, and the accuracy shall be checked for at least 5 settings corresponding to dilution ratio between 3 and 50, relative to q_{mdew} used during the test.

(c) The Transfer Tube (TT) shall be disconnected from the exhaust, and a calibrated flow-measuring device with a suitable range to measure q_{mp} shall be connected to the transfer tube. q_{mdew} shall be set to the value used during the test, and q_{mdw} shall be sequentially set to at least 5 values corresponding to dilution ratios between 3 and 50. Alternatively, a special calibration flow path may be provided, in which the tunnel is bypassed, but the total and diluent flow through the corresponding meters as in the actual test.

(d) A tracer gas shall be fed into the exhaust Transfer Tube TT. This tracer gas may be a component of the exhaust gas, like CO_2 or NO_x. After dilution in the tunnel the tracer gas component shall be measured. This shall be carried out for 5 dilution ratios between 3 and 50. The accuracy of the sample flow shall be determined from the dilution ratio r_d:

$$q_{mp} = q_{mdew} / r_d \qquad (88)$$

The accuracies of the gas analyzers shall be taken into account to guarantee the accuracy of q_{mp}.

9.4.6.4. Carbon flow check

A carbon flow check using actual exhaust is strongly recommended for detecting measurement and control problems and verifying the proper operation of the partial flow system. The carbon flow check should be run at least each time a new engine is installed, or something significant is changed in the test cell configuration.

The engine shall be operated at peak torque load and speed or any other steady state mode that produces 5 per cent or more of CO_2. The partial flow sampling system shall be operated with a dilution factor of about 15 to 1.

If a carbon flow check is conducted, the procedure given in Annex 5 shall be applied. The carbon flow rates shall be calculated in accordance with equations 106 to 108 in Annex 5. All carbon flow rates should agree to within 3 per cent.

9.4.6.5. Pre-test check

A pre-test check shall be performed within 2 hours before the test run in the following way.

The accuracy of the flowmeters shall be checked by the same method as used for calibration (see paragraph 9.4.6.2.) for at least two points, including flow values of q_{mdw} that correspond to dilution ratios between 5 and 15 for the q_{mdew} value used during the test.

If it can be demonstrated by records of the calibration procedure under paragraph 9.4.6.2. that the flowmeter calibration is stable over a longer period of time, the pre-test check may be omitted.

9.4.6.6. Determination of the transformation time

The system settings for the transformation time evaluation shall be exactly the same as during measurement of the test run. The transformation time shall be determined by the following method.

An independent reference flowmeter with a measurement range appropriate for the probe flow shall be put in series with and closely coupled to the probe. This flowmeter shall have a transformation time of less than 100 ms for the flow step size used in the response time measurement, with flow restriction sufficiently low as to not affect the dynamic performance of the partial flow dilution system, and consistent with good engineering practice.

A step change shall be introduced to the exhaust flow (or airflow if exhaust flow is calculated) input of the partial flow dilution system, from a low flow to at least 90 per cent of maximum exhaust flow. The trigger for the step change shall be the same one used to start the look-ahead control in actual testing. The exhaust flow step stimulus and the flowmeter response shall be recorded at a sample rate of at least 10 Hz.

From this data, the transformation time shall be determined for the partial flow dilution system, which is the time from the initiation of the step stimulus to the 50 per cent point of the flowmeter response. In a similar manner, the transformation times of the q_{mp} signal of the partial flow dilution system and of the $q_{mew,i}$ signal of the exhaust flowmeter shall be determined. These signals are used in the regression checks performed after each test (see paragraph 9.4.6.1.)

The calculation shall be repeated for at least 5 rise and fall stimuli, and the results shall be averaged. The internal transformation time (< 100 ms) of the reference flowmeter shall be subtracted from this value. This is the "look-ahead" value of the partial flow dilution system, which shall be applied in accordance with paragraph 9.4.6.1.

9.5. Calibration of the CVS system

9.5.1. General

The CVS system shall be calibrated by using an accurate flowmeter and a restricting device. The flow through the system shall be measured at different restriction settings, and the control parameters of the system shall be measured and related to the flow.

Various types of flowmeters may be used, e.g. calibrated venturi, calibrated laminar flowmeter, calibrated turbine meter.

9.5.2. Calibration of the Positive Displacement Pump (PDP)

All the parameters related to the pump shall be simultaneously measured along with the parameters related to a calibration venturi which is connected in series with the pump. The calculated flow rate (in m^3/s at pump inlet, absolute pressure and temperature) shall be plotted versus a correlation function which is the value of a specific combination of pump parameters. The linear equation which relates the pump flow and the correlation function shall be determined. If a CVS has a multiple speed drive, the calibration shall be performed for each range used.

Temperature stability shall be maintained during calibration.

Leaks in all the connections and ducting between the calibration venturi and the CVS pump shall be maintained lower than 0.3 per cent of the lowest flow point (highest restriction and lowest PDP speed point).

9.5.2.1. Data analysis

The airflow rate ($q_{v\mathrm{CVS}}$) at each restriction setting (minimum 6 settings) shall be calculated in standard m^3/s from the flowmeter data using the manufacturer's prescribed method. The airflow rate shall then be converted to pump flow (V_0) in m^3/rev at absolute pump inlet temperature and pressure as follows:

$$V_0 = \frac{q_{v\mathrm{CVS}}}{n} \times \frac{T}{273} \times \frac{101.3}{p_\mathrm{p}} \tag{89}$$

Where:

$q_{v\mathrm{CVS}}$ is the airflow rate at standard conditions (101.3 kPa, 273 K), m^3/s

T is the temperature at pump inlet, K

p_p is the absolute pressure at pump inlet, kPa

n is the pump speed, rev/s

To account for the interaction of pressure variations at the pump and the pump slip rate, the correlation function (X_0) between pump speed, pressure differential from pump inlet to pump outlet and absolute pump outlet pressure shall be calculated as follows:

$$X_0 = \frac{1}{n} \times \sqrt{\frac{\Delta p_\mathrm{p}}{p_\mathrm{p}}} \tag{90}$$

Where:

Δp_p is the pressure differential from pump inlet to pump outlet, kPa

p_p is the absolute outlet pressure at pump outlet, kPa

A linear least-square fit shall be performed to generate the calibration equation as follows:

$$V_0 = D_0 - m \times X_0 \tag{91}$$

D_0 and m are the intercept and slope, respectively, describing the regression lines.

For a CVS system with multiple speeds, the calibration curves generated for the different pump flow ranges shall be approximately parallel, and the intercept values (D_0) shall increase as the pump flow range decreases.

The calculated values from the equation shall be within ±0.5 per cent of the measured value of V_0. Values of m will vary from one pump to another. Particulate influx over time will cause the pump slip to decrease, as reflected by lower values for m. Therefore, calibration shall be performed at pump start-up, after major maintenance, and if the total system verification indicates a change of the slip rate.

9.5.3. Calibration of the Critical Flow Venturi (CFV)

Calibration of the CFV is based upon the flow equation for a critical venturi. Gas flow is a function of venturi inlet pressure and temperature.

To determine the range of critical flow, K_v shall be plotted as a function of venturi inlet pressure. For critical (choked) flow, K_v will have a relatively constant value. As pressure decreases (vacuum increases), the venturi becomes unchoked and K_v decreases, which indicates that the CFV is operated outside the permissible range.

9.5.3.1. Data analysis

The airflow rate ($q_{v\mathrm{CVS}}$) at each restriction setting (minimum 8 settings) shall be calculated in standard m^3/s from the flowmeter data using the manufacturer's prescribed method. The calibration coefficient shall be calculated from the calibration data for each setting as follows:

$$K_v = \frac{q_{v\mathrm{CVS}} \times \sqrt{T}}{p_\mathrm{p}} \tag{92}$$

Where:

$q_{v\mathrm{CVS}}$ is the airflow rate at standard conditions (101.3 kPa, 273 K), m^3/s

T is the temperature at the venturi inlet, K

p_p is the absolute pressure at venturi inlet, kPa

The average K_V and the standard deviation shall be calculated. The standard deviation shall not exceed ±0.3 per cent of the average K_V.

9.5.4. Calibration of the Subsonic Venturi (SSV)

Calibration of the SSV is based upon the flow equation for a subsonic venturi. Gas flow is a function of inlet pressure and temperature, pressure drop between the SSV inlet and throat, as shown in equation 56 (see paragraph 8.5.1.4.).

9.5.4.1. Data analysis

The gas flow rate (Q_SSV) at each restriction setting (minimum 16 settings) shall be calculated in standard m^3/s from the flowmeter data using the manufacturer's prescribed method. The discharge coefficient shall be calculated from the calibration data for each setting as follows:

$$C_d = \frac{Q_{SSV}}{d_V^{\,2} \times p_p \times \sqrt{\left[\frac{1}{T} \times \left(r_p^{\,1.4286} - r_p^{\,1.7143}\right) \times \left(\frac{1}{1 - r_D^{\,4} \times r_p^{\,1.4286}}\right)\right]}} \tag{93}$$

Where:

Q_SSV is the airflow rate at standard conditions (101.3 kPa, 273 K), m^3/s

T is the temperature at the venturi inlet, K

d_V is the diameter of the SSV throat, m

r_p is the ratio of the SSV throat to inlet absolute static pressure = $1 - \frac{\Delta p}{p_\mathrm{p}}$

r_D is the ratio of the SSV throat diameter, d_V, to the inlet pipe inner diameter D

To determine the range of subsonic flow, C_d shall be plotted as a function of Reynolds number *Re*, at the SSV throat. The *Re* at the SSV throat shall be calculated with the following equation:

$$\mathrm{Re} = A_1 \times \frac{Q_\mathrm{SSV}}{d_\mathrm{V} \times \mu} \tag{94}$$

With

$$\mu = \frac{\mathrm{b} \times T^{1.5}}{\mathrm{S} + T} \tag{95}$$

Where:

A_1 is 25.55152 in SI units of $\left(\frac{1}{m^3}\right)\left(\frac{\min}{s}\right)\left(\frac{mm}{m}\right)$

Q_{SSV} is the airflow rate at standard conditions (101.3 kPa, 273 K), m^3/s

d_V is the diameter of the SSV throat, m

μ is the absolute or dynamic viscosity of the gas, kg/ms

b is 1.458 x 10^6 (empirical constant), kg/ms $K^{0.5}$

S is 110.4 (empirical constant), K

Because Q_{SSV} is an input to the *Re* equation, the calculations shall be started with an initial guess for Q_{SSV} or C_d of the calibration venturi, and repeated until Q_{SSV} converges. The convergence method shall be accurate to 0.1 per cent of point or better.

For a minimum of sixteen points in the region of subsonic flow, the calculated values of C_d from the resulting calibration curve fit equation shall be within ±0.5 per cent of the measured C_d for each calibration point.

9.5.5. Total system verification

The total accuracy of the CVS sampling system and analytical system shall be determined by introducing a known mass of a pollutant gas into the system while it is being operated in the normal manner. The pollutant is analyzed, and the mass calculated in accordance with paragraph 8.5.2.3. except in the case of propane where a *u* factor of 0.000507 is used in place of 0.000480 for HC. Either of the following two techniques shall be used.

9.5.5.1. Metering with a critical flow orifice

A known quantity of pure gas (carbon monoxide or propane) shall be fed into the CVS system through a calibrated critical orifice. If the inlet pressure is high enough, the flow rate, which is adjusted by means of the critical flow orifice, is independent of the orifice outlet pressure (critical flow). The CVS system shall be operated as in a normal exhaust emission test for about 5 to 10 minutes. A gas sample shall be analyzed with the usual equipment (sampling bag or integrating method), and the mass of the gas calculated.

The mass so determined shall be within ±3 per cent of the known mass of the gas injected.

9.5.5.2. Metering by means of a gravimetric technique

The mass of a small cylinder filled with carbon monoxide or propane shall be determined with a precision of ±0.01 g. For about 5 to 10 minutes, the CVS system shall be operated as in a normal exhaust emission test, while carbon monoxide or propane is injected into the system. The quantity of pure gas discharged shall be determined by means of differential weighing. A gas sample shall be analyzed with the usual equipment (sampling bag or integrating method), and the mass of the gas calculated.

The mass so determined shall be within ±3 per cent of the known mass of the gas injected.

Annex 1

(a) WHTC engine dynamometer schedule

Time *s*	*Norm. Speed per cent*	*Norm. Torque per cent*	*Time* *s*	*Norm. Speed per cent*	*Norm. Torque per cent*	*Time* *s*	*Norm. Speed per cent*	*Norm. Torque per cent*
1	0.0	0.0	47	0.0	0.0	93	32.8	32.7
2	0.0	0.0	48	0.0	0.0	94	33.7	32.5
3	0.0	0.0	49	0.0	0.0	95	34.4	29.5
4	0.0	0.0	50	0.0	13.1	96	34.3	26.5
5	0.0	0.0	51	13.1	30.1	97	34.4	24.7
6	0.0	0.0	52	26.3	25.5	98	35.0	24.9
7	1.5	8.9	53	35.0	32.2	99	35.6	25.2
8	15.8	30.9	54	41.7	14.3	100	36.1	24.8
9	27.4	1.3	55	42.2	0.0	101	36.3	24.0
10	32.6	0.7	56	42.8	11.6	102	36.2	23.6
11	34.8	1.2	57	51.0	20.9	103	36.2	23.5
12	36.2	7.4	58	60.0	9.6	104	36.8	22.7
13	37.1	6.2	59	49.4	0.0	105	37.2	20.9
14	37.9	10.2	60	38.9	16.6	106	37.0	19.2
15	39.6	12.3	61	43.4	30.8	107	36.3	18.4
16	42.3	12.5	62	49.4	14.2	108	35.4	17.6
17	45.3	12.6	63	40.5	0.0	109	35.2	14.9
18	48.6	6.0	64	31.5	43.5	110	35.4	9.9
19	40.8	0.0	65	36.6	78.2	111	35.5	4.3
20	33.0	16.3	66	40.8	67.6	112	35.2	6.6
21	42.5	27.4	67	44.7	59.1	113	34.9	10.0
22	49.3	26.7	68	48.3	52.0	114	34.7	25.1
23	54.0	18.0	69	51.9	63.8	115	34.4	29.3
24	57.1	12.9	70	54.7	27.9	116	34.5	20.7
25	58.9	8.6	71	55.3	18.3	117	35.2	16.6
26	59.3	6.0	72	55.1	16.3	118	35.8	16.2
27	59.0	4.9	73	54.8	11.1	119	35.6	20.3
28	57.9	m	74	54.7	11.5	120	35.3	22.5
29	55.7	m	75	54.8	17.5	121	35.3	23.4
30	52.1	m	76	55.6	18.0	122	34.7	11.9
31	46.4	m	77	57.0	14.1	123	45.5	0.0
32	38.6	m	78	58.1	7.0	124	56.3	m
33	29.0	m	79	43.3	0.0	125	46.2	m
34	20.8	m	80	28.5	25.0	126	50.1	0.0
35	16.9	m	81	30.4	47.8	127	54.0	m
36	16.9	42.5	82	32.1	39.2	128	40.5	m
37	18.8	38.4	83	32.7	39.3	129	27.0	m
38	20.7	32.9	84	32.4	17.3	130	13.5	m
39	21.0	0.0	85	31.6	11.4	131	0.0	0.0
40	19.1	0.0	86	31.1	10.2	132	0.0	0.0
41	13.7	0.0	87	31.1	19.5	133	0.0	0.0
42	2.2	0.0	88	31.4	22.5	134	0.0	0.0
43	0.0	0.0	89	31.6	22.9	135	0.0	0.0
44	0.0	0.0	90	31.6	24.3	136	0.0	0.0
45	0.0	0.0	91	31.9	26.9	137	0.0	0.0
46	0.0	0.0	92	32.4	30.6	138	0.0	0.0

Time *s*	*Norm. Speed per cent*	*Norm. Torque per cent*	*Time* *s*	*Norm. Speed per cent*	*Norm. Torque per cent*	*Time* *s*	*Norm. Speed per cent*	*Norm. Torque per cent*
139	0.0	0.0	189	0.0	5.9	239	0.0	0.0
140	0.0	0.0	190	0.0	0.0	240	0.0	0.0
141	0.0	0.0	191	0.0	0.0	241	0.0	0.0
142	0.0	4.9	192	0.0	0.0	242	0.0	0.0
143	0.0	7.3	193	0.0	0.0	243	0.0	0.0
144	4.4	28.7	194	0.0	0.0	244	0.0	0.0
145	11.1	26.4	195	0.0	0.0	245	0.0	0.0
146	15.0	9.4	196	0.0	0.0	246	0.0	0.0
147	15.9	0.0	197	0.0	0.0	247	0.0	0.0
148	15.3	0.0	198	0.0	0.0	248	0.0	0.0
149	14.2	0.0	199	0.0	0.0	249	0.0	0.0
150	13.2	0.0	200	0.0	0.0	250	0.0	0.0
151	11.6	0.0	201	0.0	0.0	251	0.0	0.0
152	8.4	0.0	202	0.0	0.0	252	0.0	0.0
153	5.4	0.0	203	0.0	0.0	253	0.0	31.6
154	4.3	5.6	204	0.0	0.0	254	9.4	13.6
155	5.8	24.4	205	0.0	0.0	255	22.2	16.9
156	9.7	20.7	206	0.0	0.0	256	33.0	53.5
157	13.6	21.1	207	0.0	0.0	257	43.7	22.1
158	15.6	21.5	208	0.0	0.0	258	39.8	0.0
159	16.5	21.9	209	0.0	0.0	259	36.0	45.7
160	18.0	22.3	210	0.0	0.0	260	47.6	75.9
161	21.1	46.9	211	0.0	0.0	261	61.2	70.4
162	25.2	33.6	212	0.0	0.0	262	72.3	70.4
163	28.1	16.6	213	0.0	0.0	263	76.0	m
164	28.8	7.0	214	0.0	0.0	264	74.3	m
165	27.5	5.0	215	0.0	0.0	265	68.5	m
166	23.1	3.0	216	0.0	0.0	266	61.0	m
167	16.9	1.9	217	0.0	0.0	267	56.0	m
168	12.2	2.6	218	0.0	0.0	268	54.0	m
169	9.9	3.2	219	0.0	0.0	269	53.0	m
170	9.1	4.0	220	0.0	0.0	270	50.8	m
171	8.8	3.8	221	0.0	0.0	271	46.8	m
172	8.5	12.2	222	0.0	0.0	272	41.7	m
173	8.2	29.4	223	0.0	0.0	273	35.9	m
174	9.6	20.1	224	0.0	0.0	274	29.2	m
175	14.7	16.3	225	0.0	0.0	275	20.7	m
176	24.5	8.7	226	0.0	0.0	276	10.1	m
177	39.4	3.3	227	0.0	0.0	277	0.0	m
178	39.0	2.9	228	0.0	0.0	278	0.0	0.0
179	38.5	5.9	229	0.0	0.0	279	0.0	0.0
180	42.4	8.0	230	0.0	0.0	280	0.0	0.0
181	38.2	6.0	231	0.0	0.0	281	0.0	0.0
182	41.4	3.8	232	0.0	0.0	282	0.0	0.0
183	44.6	5.4	233	0.0	0.0	283	0.0	0.0
184	38.8	8.2	234	0.0	0.0	284	0.0	0.0
185	37.5	8.9	235	0.0	0.0	285	0.0	0.0
186	35.4	7.3	236	0.0	0.0	286	0.0	0.0
187	28.4	7.0	237	0.0	0.0	287	0.0	0.0
188	14.8	7.0	238	0.0	0.0	288	0.0	0.0

Time *s*	*Norm. Speed per cent*	*Norm. Torque per cent*	*Time* *s*	*Norm. Speed per cent*	*Norm. Torque per cent*	*Time* *s*	*Norm. Speed per cent*	*Norm. Torque per cent*
289	0.0	0.0	339	0.0	0.0	389	25.2	14.7
290	0.0	0.0	340	0.0	0.0	390	28.6	28.4
291	0.0	0.0	341	0.0	0.0	391	35.5	65.0
292	0.0	0.0	342	0.0	0.0	392	43.8	75.3
293	0.0	0.0	343	0.0	0.0	393	51.2	34.2
294	0.0	0.0	344	0.0	0.0	394	40.7	0.0
295	0.0	0.0	345	0.0	0.0	395	30.3	45.4
296	0.0	0.0	346	0.0	0.0	396	34.2	83.1
297	0.0	0.0	347	0.0	0.0	397	37.6	85.3
298	0.0	0.0	348	0.0	0.0	398	40.8	87.5
299	0.0	0.0	349	0.0	0.0	399	44.8	89.7
300	0.0	0.0	350	0.0	0.0	400	50.6	91.9
301	0.0	0.0	351	0.0	0.0	401	57.6	94.1
302	0.0	0.0	352	0.0	0.0	402	64.6	44.6
303	0.0	0.0	353	0.0	0.0	403	51.6	0.0
304	0.0	0.0	354	0.0	0.5	404	38.7	37.4
305	0.0	0.0	355	0.0	4.9	405	42.4	70.3
306	0.0	0.0	356	9.2	61.3	406	46.5	89.1
307	0.0	0.0	357	22.4	40.4	407	50.6	93.9
308	0.0	0.0	358	36.5	50.1	408	53.8	33.0
309	0.0	0.0	359	47.7	21.0	409	55.5	20.3
310	0.0	0.0	360	38.8	0.0	410	55.8	5.2
311	0.0	0.0	361	30.0	37.0	411	55.4	m
312	0.0	0.0	362	37.0	63.6	412	54.4	m
313	0.0	0.0	363	45.5	90.8	413	53.1	m
314	0.0	0.0	364	54.5	40.9	414	51.8	m
315	0.0	0.0	365	45.9	0.0	415	50.3	m
316	0.0	0.0	366	37.2	47.5	416	48.4	m
317	0.0	0.0	367	44.5	84.4	417	45.9	m
318	0.0	0.0	368	51.7	32.4	418	43.1	m
319	0.0	0.0	369	58.1	15.2	419	40.1	m
320	0.0	0.0	370	45.9	0.0	420	37.4	m
321	0.0	0.0	371	33.6	35.8	421	35.1	m
322	0.0	0.0	372	36.9	67.0	422	32.8	m
323	0.0	0.0	373	40.2	84.7	423	45.3	0.0
324	4.5	41.0	374	43.4	84.3	424	57.8	m
325	17.2	38.9	375	45.7	84.3	425	50.6	m
326	30.1	36.8	376	46.5	m	426	41.6	m
327	41.0	34.7	377	46.1	m	427	47.9	0.0
328	50.0	32.6	378	43.9	m	428	54.2	m
329	51.4	0.1	379	39.3	m	429	48.1	m
330	47.8	m	380	47.0	m	430	47.0	31.3
331	40.2	m	381	54.6	m	431	49.0	38.3
332	32.0	m	382	62.0	m	432	52.0	40.1
333	24.4	m	383	52.0	m	433	53.3	14.5
334	16.8	m	384	43.0	m	434	52.6	0.8
335	8.1	m	385	33.9	m	435	49.8	m
336	0.0	m	386	28.4	m	436	51.0	18.6
337	0.0	0.0	387	25.5	m	437	56.9	38.9
338	0.0	0.0	388	24.6	11.0	438	67.2	45.0

Time *s*	*Norm. Speed per cent*	*Norm. Torque per cent*	*Time* *s*	*Norm. Speed per cent*	*Norm. Torque per cent*	*Time* *s*	*Norm. Speed per cent*	*Norm. Torque per cent*
439	78.6	21.5	489	45.5	m	539	56.7	m
440	65.5	0.0	490	40.4	m	540	46.9	m
441	52.4	31.3	491	49.7	0.0	541	37.5	m
442	56.4	60.1	492	59.0	m	542	30.3	m
443	59.7	29.2	493	48.9	m	543	27.3	32.3
444	45.1	0.0	494	40.0	m	544	30.8	60.3
445	30.6	4.2	495	33.5	m	545	41.2	62.3
446	30.9	8.4	496	30.0	m	546	36.0	0.0
447	30.5	4.3	497	29.1	12.0	547	30.8	32.3
448	44.6	0.0	498	29.3	40.4	548	33.9	60.3
449	58.8	m	499	30.4	29.3	549	34.6	38.4
450	55.1	m	500	32.2	15.4	550	37.0	16.6
451	50.6	m	501	33.9	15.8	551	42.7	62.3
452	45.3	m	502	35.3	14.9	552	50.4	28.1
453	39.3	m	503	36.4	15.1	553	40.1	0.0
454	49.1	0.0	504	38.0	15.3	554	29.9	8.0
455	58.8	m	505	40.3	50.9	555	32.5	15.0
456	50.7	m	506	43.0	39.7	556	34.6	63.1
457	42.4	m	507	45.5	20.6	557	36.7	58.0
458	44.1	0.0	508	47.3	20.6	558	39.4	52.9
459	45.7	m	509	48.8	22.1	559	42.8	47.8
460	32.5	m	510	50.1	22.1	560	46.8	42.7
461	20.7	m	511	51.4	42.4	561	50.7	27.5
462	10.0	m	512	52.5	31.9	562	53.4	20.7
463	0.0	0.0	513	53.7	21.6	563	54.2	13.1
464	0.0	1.5	514	55.1	11.6	564	54.2	0.4
465	0.9	41.1	515	56.8	5.7	565	53.4	0.0
466	7.0	46.3	516	42.4	0.0	566	51.4	m
467	12.8	48.5	517	27.9	8.2	567	48.7	m
468	17.0	50.7	518	29.0	15.9	568	45.6	m
469	20.9	52.9	519	30.4	25.1	569	42.4	m
470	26.7	55.0	520	32.6	60.5	570	40.4	m
471	35.5	57.2	521	35.4	72.7	571	39.8	5.8
472	46.9	23.8	522	38.4	88.2	572	40.7	39.7
473	44.5	0.0	523	41.0	65.1	573	43.8	37.1
474	42.1	45.7	524	42.9	25.6	574	48.1	39.1
475	55.6	77.4	525	44.2	15.8	575	52.0	22.0
476	68.8	100.0	526	44.9	2.9	576	54.7	13.2
477	81.7	47.9	527	45.1	m	577	56.4	13.2
478	71.2	0.0	528	44.8	m	578	57.5	6.6
479	60.7	38.3	529	43.9	m	579	42.6	0.0
480	68.8	72.7	530	42.4	m	580	27.7	10.9
481	75.0	m	531	40.2	m	581	28.5	21.3
482	61.3	m	532	37.1	m	582	29.2	23.9
483	53.5	m	533	47.0	0.0	583	29.5	15.2
484	45.9	58.0	534	57.0	m	584	29.7	8.8
485	48.1	80.0	535	45.1	m	585	30.4	20.8
486	49.4	97.9	536	32.6	m	586	31.9	22.9
487	49.7	m	537	46.8	0.0	587	34.3	61.4
488	48.7	m	538	61.5	m	588	37.2	76.6

Time *s*	*Norm. Speed per cent*	*Norm. Torque per cent*	*Time* *s*	*Norm. Speed per cent*	*Norm. Torque per cent*	*Time* *s*	*Norm. Speed per cent*	*Norm. Torque per cent*
589	40.1	27.5	639	39.8	m	689	46.6	0.0
590	42.3	25.4	640	36.0	m	690	32.3	34.6
591	43.5	32.0	641	29.7	m	691	32.7	68.6
592	43.8	6.0	642	21.5	m	692	32.6	67.0
593	43.5	m	643	14.1	m	693	31.3	m
594	42.8	m	644	0.0	0.0	694	28.1	m
595	41.7	m	645	0.0	0.0	695	43.0	0.0
596	40.4	m	646	0.0	0.0	696	58.0	m
597	39.3	m	647	0.0	0.0	697	58.9	m
598	38.9	12.9	648	0.0	0.0	698	49.4	m
599	39.0	18.4	649	0.0	0.0	699	41.5	m
600	39.7	39.2	650	0.0	0.0	700	48.4	0.0
601	41.4	60.0	651	0.0	0.0	701	55.3	m
602	43.7	54.5	652	0.0	0.0	702	41.8	m
603	46.2	64.2	653	0.0	0.0	703	31.6	m
604	48.8	73.3	654	0.0	0.0	704	24.6	m
605	51.0	82.3	655	0.0	0.0	705	15.2	m
606	52.1	0.0	656	0.0	3.4	706	7.0	m
607	52.0	m	657	1.4	22.0	707	0.0	0.0
608	50.9	m	658	10.1	45.3	708	0.0	0.0
609	49.4	m	659	21.5	10.0	709	0.0	0.0
610	47.8	m	660	32.2	0.0	710	0.0	0.0
611	46.6	m	661	42.3	46.0	711	0.0	0.0
612	47.3	35.3	662	57.1	74.1	712	0.0	0.0
613	49.2	74.1	663	72.1	34.2	713	0.0	0.0
614	51.1	95.2	664	66.9	0.0	714	0.0	0.0
615	51.7	m	665	60.4	41.8	715	0.0	0.0
616	50.8	m	666	69.1	79.0	716	0.0	0.0
617	47.3	m	667	77.1	38.3	717	0.0	0.0
618	41.8	m	668	63.1	0.0	718	0.0	0.0
619	36.4	m	669	49.1	47.9	719	0.0	0.0
620	30.9	m	670	53.4	91.3	720	0.0	0.0
621	25.5	37.1	671	57.5	85.7	721	0.0	0.0
622	33.8	38.4	672	61.5	89.2	722	0.0	0.0
623	42.1	m	673	65.5	85.9	723	0.0	0.0
624	34.1	m	674	69.5	89.5	724	0.0	0.0
625	33.0	37.1	675	73.1	75.5	725	0.0	0.0
626	36.4	38.4	676	76.2	73.6	726	0.0	0.0
627	43.3	17.1	677	79.1	75.6	727	0.0	0.0
628	35.7	0.0	678	81.8	78.2	728	0.0	0.0
629	28.1	11.6	679	84.1	39.0	729	0.0	0.0
630	36.5	19.2	680	69.6	0.0	730	0.0	0.0
631	45.2	8.3	681	55.0	25.2	731	0.0	0.0
632	36.5	0.0	682	55.8	49.9	732	0.0	0.0
633	27.9	32.6	683	56.7	46.4	733	0.0	0.0
634	31.5	59.6	684	57.6	76.3	734	0.0	0.0
635	34.4	65.2	685	58.4	92.7	735	0.0	0.0
636	37.0	59.6	686	59.3	99.9	736	0.0	0.0
637	39.0	49.0	687	60.1	95.0	737	0.0	0.0
638	40.2	m	688	61.0	46.7	738	0.0	0.0

Time *s*	*Norm. Speed per cent*	*Norm. Torque per cent*	*Time* *s*	*Norm. Speed per cent*	*Norm. Torque per cent*	*Time* *s*	*Norm. Speed per cent*	*Norm. Torque per cent*
739	0.0	0.0	789	17.2	m	839	38.1	m
740	0.0	0.0	790	14.0	37.6	840	37.2	42.7
741	0.0	0.0	791	18.4	25.0	841	37.5	70.8
742	0.0	0.0	792	27.6	17.7	842	39.1	48.6
743	0.0	0.0	793	39.8	6.8	843	41.3	0.1
744	0.0	0.0	794	34.3	0.0	844	42.3	m
745	0.0	0.0	795	28.7	26.5	845	42.0	m
746	0.0	0.0	796	41.5	40.9	846	40.8	m
747	0.0	0.0	797	53.7	17.5	847	38.6	m
748	0.0	0.0	798	42.4	0.0	848	35.5	m
749	0.0	0.0	799	31.2	27.3	849	32.1	m
750	0.0	0.0	800	32.3	53.2	850	29.6	m
751	0.0	0.0	801	34.5	60.6	851	28.8	39.9
752	0.0	0.0	802	37.6	68.0	852	29.2	52.9
753	0.0	0.0	803	41.2	75.4	853	30.9	76.1
754	0.0	0.0	804	45.8	82.8	854	34.3	76.5
755	0.0	0.0	805	52.3	38.2	855	38.3	75.5
756	0.0	0.0	806	42.5	0.0	856	42.5	74.8
757	0.0	0.0	807	32.6	30.5	857	46.6	74.2
758	0.0	0.0	808	35.0	57.9	858	50.7	76.2
759	0.0	0.0	809	36.0	77.3	859	54.8	75.1
760	0.0	0.0	810	37.1	96.8	860	58.7	36.3
761	0.0	0.0	811	39.6	80.8	861	45.2	0.0
762	0.0	0.0	812	43.4	78.3	862	31.8	37.2
763	0.0	0.0	813	47.2	73.4	863	33.8	71.2
764	0.0	0.0	814	49.6	66.9	864	35.5	46.4
765	0.0	0.0	815	50.2	62.0	865	36.6	33.6
766	0.0	0.0	816	50.2	57.7	866	37.2	20.0
767	0.0	0.0	817	50.6	62.1	867	37.2	m
768	0.0	0.0	818	52.3	62.9	868	37.0	m
769	0.0	0.0	819	54.8	37.5	869	36.6	m
770	0.0	0.0	820	57.0	18.3	870	36.0	m
771	0.0	22.0	821	42.3	0.0	871	35.4	m
772	4.5	25.8	822	27.6	29.1	872	34.7	m
773	15.5	42.8	823	28.4	57.0	873	34.1	m
774	30.5	46.8	824	29.1	51.8	874	33.6	m
775	45.5	29.3	825	29.6	35.3	875	33.3	m
776	49.2	13.6	826	29.7	33.3	876	33.1	m
777	39.5	0.0	827	29.8	17.7	877	32.7	m
778	29.7	15.1	828	29.5	m	878	31.4	m
779	34.8	26.9	829	28.9	m	879	45.0	0.0
780	40.0	13.6	830	43.0	0.0	880	58.5	m
781	42.2	m	831	57.1	m	881	53.7	m
782	42.1	m	832	57.7	m	882	47.5	m
783	40.8	m	833	56.0	m	883	40.6	m
784	37.7	37.6	834	53.8	m	884	34.1	m
785	47.0	35.0	835	51.2	m	885	45.3	0.0
786	48.8	33.4	836	48.1	m	886	56.4	m
787	41.7	m	837	44.5	m	887	51.0	m
788	27.7	m	838	40.9	m	888	44.5	m

Time *s*	*Norm. Speed per cent*	*Norm. Torque per cent*	*Time* *s*	*Norm. Speed per cent*	*Norm. Torque per cent*	*Time* *s*	*Norm. Speed per cent*	*Norm. Torque per cent*
889	36.4	m	939	32.7	56.5	989	32.6	m
890	26.6	m	940	33.4	62.8	990	30.9	m
891	20.0	m	941	34.6	68.2	991	29.9	m
892	13.3	m	942	35.8	68.6	992	29.2	m
893	6.7	m	943	38.6	65.0	993	44.1	0.0
894	0.0	0.0	944	42.3	61.9	994	59.1	m
895	0.0	0.0	945	44.1	65.3	995	56.8	m
896	0.0	0.0	946	45.3	63.2	996	53.5	m
897	0.0	0.0	947	46.5	30.6	997	47.8	m
898	0.0	0.0	948	46.7	11.1	998	41.9	m
899	0.0	0.0	949	45.9	16.1	999	35.9	m
900	0.0	0.0	950	45.6	21.8	1000	44.3	0.0
901	0.0	5.8	951	45.9	24.2	1001	52.6	m
902	2.5	27.9	952	46.5	24.7	1002	43.4	m
903	12.4	29.0	953	46.7	24.7	1003	50.6	0.0
904	19.4	30.1	954	46.8	28.2	1004	57.8	m
905	29.3	31.2	955	47.2	31.2	1005	51.6	m
906	37.1	10.4	956	47.6	29.6	1006	44.8	m
907	40.6	4.9	957	48.2	31.2	1007	48.6	0.0
908	35.8	0.0	958	48.6	33.5	1008	52.4	m
909	30.9	7.6	959	48.8	m	1009	45.4	m
910	35.4	13.8	960	47.6	m	1010	37.2	m
911	36.5	11.1	961	46.3	m	1011	26.3	m
912	40.8	48.5	962	45.2	m	1012	17.9	m
913	49.8	3.7	963	43.5	m	1013	16.2	1.9
914	41.2	0.0	964	41.4	m	1014	17.8	7.5
915	32.7	29.7	965	40.3	m	1015	25.2	18.0
916	39.4	52.1	966	39.4	m	1016	39.7	6.5
917	48.8	22.7	967	38.0	m	1017	38.6	0.0
918	41.6	0.0	968	36.3	m	1018	37.4	5.4
919	34.5	46.6	969	35.3	5.8	1019	43.4	9.7
920	39.7	84.4	970	35.4	30.2	1020	46.9	15.7
921	44.7	83.2	971	36.6	55.6	1021	52.5	13.1
922	49.5	78.9	972	38.6	48.5	1022	56.2	6.3
923	52.3	83.8	973	39.9	41.8	1023	44.0	0.0
924	53.4	77.7	974	40.3	38.2	1024	31.8	20.9
925	52.1	69.6	975	40.8	35.0	1025	38.7	36.3
926	47.9	63.6	976	41.9	32.4	1026	47.7	47.5
927	46.4	55.2	977	43.2	26.4	1027	54.5	22.0
928	46.5	53.6	978	43.5	m	1028	41.3	0.0
929	46.4	62.3	979	42.9	m	1029	28.1	26.8
930	46.1	58.2	980	41.5	m	1030	31.6	49.2
931	46.2	61.8	981	40.9	m	1031	34.5	39.5
932	47.3	62.3	982	40.5	m	1032	36.4	24.0
933	49.3	57.1	983	39.5	m	1033	36.7	m
934	52.6	58.1	984	38.3	m	1034	35.5	m
935	56.3	56.0	985	36.9	m	1035	33.8	m
936	59.9	27.2	986	35.4	m	1036	33.7	19.8
937	45.8	0.0	987	34.5	m	1037	35.3	35.1
938	31.8	28.8	988	33.9	m	1038	38.0	33.9

Time	*Norm.*	*Norm.*	*Time*	*Norm.*	*Norm.*	*Time*	*Norm.*	*Norm.*
	Speed	*Torque*		*Speed*	*Torque*		*Speed*	*Torque*
s	*per cent*	*per cent*	*s*	*per cent*	*per cent*	*s*	*per cent*	*per cent*
1039	40.1	34.5	1,089	46.3	24.0	1139	51.7	0.0
1040	42.2	40.4	1,090	47.8	20.6	1140	59.2	m
1041	45.2	44.0	1,091	47.2	3.8	1141	47.2	m
1042	48.3	35.9	1,092	45.6	4.4	1142	35.1	0.0
1043	50.1	29.6	1,093	44.6	4.1	1143	23.1	m
1044	52.3	38.5	1,094	44.1	m	1144	13.1	m
1045	55.3	57.7	1,095	42.9	m	1145	5.0	m
1046	57.0	50.7	1,096	40.9	m	1146	0.0	0.0
1047	57.7	25.2	1,097	39.2	m	1147	0.0	0.0
1048	42.9	0.0	1,098	37.0	m	1148	0.0	0.0
1049	28.2	15.7	1,099	35.1	2.0	1149	0.0	0.0
1050	29.2	30.5	1,100	35.6	43.3	1150	0.0	0.0
1051	31.1	52.6	1,101	38.7	47.6	1151	0.0	0.0
1052	33.4	60.7	1,102	41.3	40.4	1152	0.0	0.0
1053	35.0	61.4	1,103	42.6	45.7	1153	0.0	0.0
1054	35.3	18.2	1,104	43.9	43.3	1154	0.0	0.0
1055	35.2	14.9	1,105	46.9	41.2	1155	0.0	0.0
1056	34.9	11.7	1,106	52.4	40.1	1156	0.0	0.0
1057	34.5	12.9	1,107	56.3	39.3	1157	0.0	0.0
1058	34.1	15.5	1108	57.4	25.5	1158	0.0	0.0
1059	33.5	m	1109	57.2	25.4	1159	0.0	0.0
1060	31.8	m	1110	57.0	25.4	1160	0.0	0.0
1061	30.1	m	1111	56.8	25.3	1161	0.0	0.0
1062	29.6	10.3	1112	56.3	25.3	1162	0.0	0.0
1063	30.0	26.5	1113	55.6	25.2	1163	0.0	0.0
1064	31.0	18.8	1114	56.2	25.2	1164	0.0	0.0
1065	31.5	26.5	1115	58.0	12.4	1165	0.0	0.0
1066	31.7	m	1116	43.4	0.0	1166	0.0	0.0
1067	31.5	m	1117	28.8	26.2	1167	0.0	0.0
1068	30.6	m	1118	30.9	49.9	1168	0.0	0.0
1069	30.0	m	1119	32.3	40.5	1169	0.0	0.0
1070	30.0	m	1120	32.5	12.4	1170	0.0	0.0
1071	29.4	m	1121	32.4	12.2	1171	0.0	0.0
1072	44.3	0.0	1122	32.1	6.4	1172	0.0	0.0
1073	59.2	m	1123	31.0	12.4	1173	0.0	0.0
1074	58.3	m	1124	30.1	18.5	1174	0.0	0.0
1075	57.1	m	1125	30.4	35.6	1175	0.0	0.0
1076	55.4	m	1126	31.2	30.1	1176	0.0	0.0
1077	53.5	m	1127	31.5	30.8	1177	0.0	0.0
1078	51.5	m	1128	31.5	26.9	1178	0.0	0.0
1079	49.7	m	1129	31.7	33.9	1179	0.0	0.0
1080	47.9	m	1130	32.0	29.9	1180	0.0	0.0
1081	46.4	m	1131	32.1	m	1181	0.0	0.0
1082	45.5	m	1132	31.4	m	1182	0.0	0.0
1083	45.2	m	1133	30.3	m	1183	0.0	0.0
1084	44.3	m	1134	29.8	m	1184	0.0	0.0
1085	43.6	m	1135	44.3	0.0	1185	0.0	0.0
1086	43.1	m	1136	58.9	m	1186	0.0	0.0
1087	42.5	25.6	1137	52.1	m	1187	0.0	0.0
1088	43.3	25.7	1138	44.1	m	1188	0.0	0.0

Time	*Norm. Speed*	*Norm. Torque*	*Time*	*Norm. Speed*	*Norm. Torque*	*Time*	*Norm. Speed*	*Norm. Torque*
s	*per cent*	*per cent*	*s*	*per cent*	*per cent*	*s*	*per cent*	*per cent*
1189	0.0	0.0	1239	58.5	85.4	1289	61.9	76.1
1190	0.0	0.0	1240	59.5	85.6	1290	65.6	73.7
1191	0.0	0.0	1241	61.0	86.6	1291	69.9	79.3
1192	0.0	0.0	1242	62.6	86.8	1292	74.1	81.3
1193	0.0	0.0	1243	64.1	87.6	1293	78.3	83.2
1194	0.0	0.0	1244	65.4	87.5	1294	82.6	86.0
1195	0.0	0.0	1245	66.7	87.8	1295	87.0	89.5
1196	0.0	20.4	1246	68.1	43.5	1296	91.2	90.8
1197	12.6	41.2	1247	55.2	0.0	1297	95.3	45.9
1198	27.3	20.4	1248	42.3	37.2	1298	81.0	0.0
1199	40.4	7.6	1249	43.0	73.6	1299	66.6	38.2
1200	46.1	m	1250	43.5	65.1	1300	67.9	75.5
1201	44.6	m	1251	43.8	53.1	1301	68.4	80.5
1202	42.7	14.7	1252	43.9	54.6	1302	69.0	85.5
1203	42.9	7.3	1253	43.9	41.2	1303	70.0	85.2
1204	36.1	0.0	1254	43.8	34.8	1304	71.6	85.9
1205	29.3	15.0	1255	43.6	30.3	1305	73.3	86.2
1206	43.8	22.6	1256	43.3	21.9	1306	74.8	86.5
1207	54.9	9.9	1257	42.8	19.9	1307	76.3	42.9
1208	44.9	0.0	1258	42.3	m	1308	63.3	0.0
1209	34.9	47.4	1259	41.4	m	1309	50.4	21.2
1210	42.7	82.7	1260	40.2	m	1310	50.6	42.3
1211	52.0	81.2	1261	38.7	m	1311	50.6	53.7
1212	61.8	82.7	1262	37.1	m	1312	50.4	90.1
1213	71.3	39.1	1263	35.6	m	1313	50.5	97.1
1214	58.1	0.0	1264	34.2	m	1314	51.0	100.0
1215	44.9	42.5	1265	32.9	m	1315	51.9	100.0
1216	46.3	83.3	1266	31.8	m	1316	52.6	100.0
1217	46.8	74.1	1267	30.7	m	1317	52.8	32.4
1218	48.1	75.7	1268	29.6	m	1318	47.7	0.0
1219	50.5	75.8	1269	40.4	0.0	1319	42.6	27.4
1220	53.6	76.7	1270	51.2	m	1320	42.1	53.5
1221	56.9	77.1	1271	49.6	m	1321	41.8	44.5
1222	60.2	78.7	1272	48.0	m	1322	41.4	41.1
1223	63.7	78.0	1273	46.4	m	1323	41.0	21.0
1224	67.2	79.6	1274	45.0	m	1324	40.3	0.0
1225	70.7	80.9	1275	43.6	m	1325	39.3	1.0
1226	74.1	81.1	1276	42.3	m	1326	38.3	15.2
1227	77.5	83.6	1277	41.0	m	1327	37.6	57.8
1228	80.8	85.6	1278	39.6	m	1328	37.3	73.2
1229	84.1	81.6	1279	38.3	m	1329	37.3	59.8
1230	87.4	88.3	1280	37.1	m	1330	37.4	52.2
1231	90.5	91.9	1281	35.9	m	1331	37.4	16.9
1232	93.5	94.1	1282	34.6	m	1332	37.1	34.3
1233	96.8	96.6	1283	33.0	m	1333	36.7	51.9
1234	100.0	m	1284	31.1	m	1334	36.2	25.3
1235	96.0	m	1285	29.2	m	1335	35.6	m
1236	81.9	m	1286	43.3	0.0	1336	34.6	m
1237	68.1	m	1287	57.4	32.8	1337	33.2	m
1238	58.1	84.7	1288	59.9	65.4	1338	31.6	m

Time	*Norm.*	*Norm.*	*Time*	*Norm.*	*Norm.*	*Time*	*Norm.*	*Norm.*
	Speed	*Torque*		*Speed*	*Torque*		*Speed*	*Torque*
s	*per cent*	*per cent*	*s*	*per cent*	*per cent*	*s*	*per cent*	*per cent*
1339	30.1	m	1389	50.4	50.2	1439	36.3	98.8
1340	28.8	m	1390	53.0	26.1	1440	37.7	100.0
1341	28.0	29.5	1391	59.5	0.0	1441	39.2	100.0
1342	28.6	100.0	1392	66.2	38.4	1442	40.9	100.0
1343	28.8	97.3	1393	66.4	76.7	1443	42.4	99.5
1344	28.8	73.4	1394	67.6	100.0	1444	43.8	98.7
1345	29.6	56.9	1395	68.4	76.6	1445	45.4	97.3
1346	30.3	91.7	1396	68.2	47.2	1446	47.0	96.6
1347	31.0	90.5	1397	69.0	81.4	1447	47.8	96.2
1348	31.8	81.7	1398	69.7	40.6	1448	48.8	96.3
1349	32.6	79.5	1399	54.7	0.0	1449	50.5	95.1
1350	33.5	86.9	1400	39.8	19.9	1450	51.0	95.9
1351	34.6	100.0	1401	36.3	40.0	1451	52.0	94.3
1352	35.6	78.7	1402	36.7	59.4	1452	52.6	94.6
1353	36.4	50.5	1403	36.6	77.5	1453	53.0	65.5
1354	37.0	57.0	1404	36.8	94.3	1454	53.2	0.0
1355	37.3	69.1	1405	36.8	100.0	1455	53.2	m
1356	37.6	49.5	1406	36.4	100.0	1456	52.6	m
1357	37.8	44.4	1407	36.3	79.7	1457	52.1	m
1358	37.8	43.4	1408	36.7	49.5	1458	51.8	m
1359	37.8	34.8	1409	36.6	39.3	1459	51.3	m
1360	37.6	24.0	1410	37.3	62.8	1460	50.7	m
1361	37.2	m	1411	38.1	73.4	1461	50.7	m
1362	36.3	m	1412	39.0	72.9	1462	49.8	m
1363	35.1	m	1413	40.2	72.0	1463	49.4	m
1364	33.7	m	1414	41.5	71.2	1464	49.3	m
1365	32.4	m	1415	42.9	77.3	1465	49.1	m
1366	31.1	m	1416	44.4	76.6	1466	49.1	m
1367	29.9	m	1417	45.4	43.1	1467	49.1	8.3
1368	28.7	m	1418	45.3	53.9	1468	48.9	16.8
1369	29.0	58.6	1419	45.1	64.8	1469	48.8	21.3
1370	29.7	88.5	1420	46.5	74.2	1470	49.1	22.1
1371	31.0	86.3	1421	47.7	75.2	1471	49.4	26.3
1372	31.8	43.4	1422	48.1	75.5	1472	49.8	39.2
1373	31.7	m	1423	48.6	75.8	1473	50.4	83.4
1374	29.9	m	1424	48.9	76.3	1474	51.4	90.6
1375	40.2	0.0	1425	49.9	75.5	1475	52.3	93.8
1376	50.4	m	1426	50.4	75.2	1476	53.3	94.0
1377	47.9	m	1427	51.1	74.6	1477	54.2	94.1
1378	45.0	m	1428	51.9	75.0	1478	54.9	94.3
1379	43.0	m	1429	52.7	37.2	1479	55.7	94.6
1380	40.6	m	1430	41.6	0.0	1480	56.1	94.9
1381	55.5	0.0	1431	30.4	36.6	1481	56.3	86.2
1382	70.4	41.7	1432	30.5	73.2	1482	56.2	64.1
1383	73.4	83.2	1433	30.3	81.6	1483	56.0	46.1
1384	74.0	83.7	1434	30.4	89.3	1484	56.2	33.4
1385	74.9	41.7	1435	31.5	90.4	1485	56.5	23.6
1386	60.0	0.0	1436	32.7	88.5	1486	56.3	18.6
1387	45.1	41.6	1437	33.7	97.2	1487	55.7	16.2
1388	47.7	84.2	1438	35.2	99.7	1488	56.0	15.9

Time *s*	*Norm. Speed per cent*	*Norm. Torque per cent*	*Time* *s*	*Norm. Speed per cent*	*Norm. Torque per cent*	*Time* *s*	*Norm. Speed per cent*	*Norm. Torque per cent*
1489	55.9	21.8	1539	57.0	59.5	1589	56.8	42.9
1490	55.8	20.9	1540	56.7	57.0	1590	56.5	42.8
1491	55.4	18.4	1541	56.7	69.8	1591	56.7	43.2
1492	55.7	25.1	1542	56.8	58.5	1592	56.5	42.8
1493	56.0	27.7	1543	56.8	47.2	1593	56.9	42.2
1494	55.8	22.4	1544	57.0	38.5	1594	56.5	43.1
1495	56.1	20.0	1545	57.0	32.8	1595	56.5	42.9
1496	55.7	17.4	1546	56.8	30.2	1596	56.7	42.7
1497	55.9	20.9	1547	57.0	27.0	1597	56.6	41.5
1498	56.0	22.9	1548	56.9	26.2	1598	56.9	41.8
1499	56.0	21.1	1549	56.7	26.2	1599	56.6	41.9
1500	55.1	19.2	1550	57.0	26.6	1600	56.7	42.6
1501	55.6	24.2	1551	56.7	27.8	1601	56.7	42.6
1502	55.4	25.6	1552	56.7	29.7	1602	56.7	41.5
1503	55.7	24.7	1553	56.8	32.1	1603	56.7	42.2
1504	55.9	24.0	1554	56.5	34.9	1604	56.5	42.2
1505	55.4	23.5	1555	56.6	34.9	1605	56.8	41.9
1506	55.7	30.9	1556	56.3	35.8	1606	56.5	42.0
1507	55.4	42.5	1557	56.6	36.6	1607	56.7	42.1
1508	55.3	25.8	1558	56.2	37.6	1608	56.4	41.9
1509	55.4	1.3	1559	56.6	38.2	1609	56.7	42.9
1510	55.0	m	1560	56.2	37.9	1610	56.7	41.8
1511	54.4	m	1561	56.6	37.5	1611	56.7	41.9
1512	54.2	m	1562	56.4	36.7	1612	56.8	42.0
1513	53.5	m	1563	56.5	34.8	1613	56.7	41.5
1514	52.4	m	1564	56.5	35.8	1614	56.6	41.9
1515	51.8	m	1565	56.5	36.2	1615	56.8	41.6
1516	50.7	m	1566	56.5	36.7	1616	56.6	41.6
1517	49.9	m	1567	56.7	37.8	1617	56.9	42.0
1518	49.1	m	1568	56.7	37.8	1618	56.7	40.7
1519	47.7	m	1569	56.6	36.6	1619	56.7	39.3
1520	47.3	m	1570	56.8	36.1	1620	56.5	41.4
1521	46.9	m	1571	56.5	36.8	1621	56.4	44.9
1522	46.9	m	1572	56.9	35.9	1622	56.8	45.2
1523	47.2	m	1573	56.7	35.0	1623	56.6	43.6
1524	47.8	m	1574	56.5	36.0	1624	56.8	42.2
1525	48.2	0.0	1575	56.4	36.5	1625	56.5	42.3
1526	48.8	23.0	1576	56.5	38.0	1626	56.5	44.4
1527	49.1	67.9	1577	56.5	39.9	1627	56.9	45.1
1528	49.4	73.7	1578	56.4	42.1	1628	56.4	45.0
1529	49.8	75.0	1579	56.5	47.0	1629	56.7	46.3
1530	50.4	75.8	1580	56.4	48.0	1630	56.7	45.5
1531	51.4	73.9	1581	56.1	49.1	1631	56.8	45.0
1532	52.3	72.2	1582	56.4	48.9	1632	56.7	44.9
1533	53.3	71.2	1583	56.4	48.2	1633	56.6	45.2
1534	54.6	71.2	1584	56.5	48.3	1634	56.8	46.0
1535	55.4	68.7	1585	56.5	47.9	1635	56.5	46.6
1536	56.7	67.0	1586	56.6	46.8	1636	56.6	48.3
1537	57.2	64.6	1587	56.6	46.2	1637	56.4	48.6
1538	57.3	61.9	1588	56.5	44.4	1638	56.6	50.3

Time	*Norm.*	*Norm.*	*Time*	*Norm.*	*Norm.*	*Time*	*Norm.*	*Norm.*
	Speed	*Torque*		*Speed*	*Torque*		*Speed*	*Torque*
s	*per cent*	*per cent*	*s*	*per cent*	*per cent*	*s*	*per cent*	*per cent*
1639	56.3	51.9	1689	57.6	8.9	1739	56.1	46.8
1640	56.5	54.1	1690	57.5	8.0	1740	56.1	45.8
1641	56.3	54.9	1691	57.5	5.8	1741	56.2	46.0
1642	56.4	55.0	1692	57.3	5.8	1742	56.3	45.9
1643	56.4	56.2	1693	57.6	5.5	1743	56.3	45.9
1644	56.2	58.6	1694	57.3	4.5	1744	56.2	44.6
1645	56.2	59.1	1695	57.2	3.2	1745	56.2	46.0
1646	56.2	62.5	1696	57.2	3.1	1746	56.4	46.2
1647	56.4	62.8	1697	57.3	4.9	1747	55.8	m
1648	56.0	64.7	1698	57.3	4.2	1748	55.5	m
1649	56.4	65.6	1699	56.9	5.5	1749	55.0	m
1650	56.2	67.7	1700	57.1	5.1	1750	54.1	m
1651	55.9	68.9	1701	57.0	5.2	1751	54.0	m
1652	56.1	68.9	1702	56.9	5.5	1752	53.3	m
1653	55.8	69.5	1703	56.6	5.4	1753	52.6	m
1654	56.0	69.8	1704	57.1	6.1	1754	51.8	m
1655	56.2	69.3	1705	56.7	5.7	1755	50.7	m
1656	56.2	69.8	1706	56.8	5.8	1756	49.9	m
1657	56.4	69.2	1707	57.0	6.1	1757	49.1	m
1658	56.3	68.7	1708	56.7	5.9	1758	47.7	m
1659	56.2	69.4	1709	57.0	6.6	1759	46.8	m
1660	56.2	69.5	1710	56.9	6.4	1760	45.7	m
1661	56.2	70.0	1711	56.7	6.7	1761	44.8	m
1662	56.4	69.7	1712	56.9	6.9	1762	43.9	m
1663	56.2	70.2	1713	56.8	5.6	1763	42.9	m
1664	56.4	70.5	1714	56.6	5.1	1764	41.5	m
1665	56.1	70.5	1715	56.6	6.5	1765	39.5	m
1666	56.5	69.7	1716	56.5	10.0	1766	36.7	m
1667	56.2	69.3	1717	56.6	12.4	1767	33.8	m
1668	56.5	70.9	1718	56.5	14.5	1768	31.0	m
1669	56.4	70.8	1719	56.6	16.3	1769	40.0	0.0
1670	56.3	71.1	1720	56.3	18.1	1770	49.1	m
1671	56.4	71.0	1721	56.6	20.7	1771	46.2	m
1672	56.7	68.6	1722	56.1	22.6	1772	43.1	m
1673	56.8	68.6	1723	56.3	25.8	1773	39.9	m
1674	56.6	68.0	1724	56.4	27.7	1774	36.6	m
1675	56.8	65.1	1725	56.0	29.7	1775	33.6	m
1676	56.9	60.9	1726	56.1	32.6	1776	30.5	m
1677	57.1	57.4	1727	55.9	34.9	1777	42.8	0.0
1678	57.1	54.3	1728	55.9	36.4	1778	55.2	m
1679	57.0	48.6	1729	56.0	39.2	1779	49.9	m
1680	57.4	44.1	1730	55.9	41.4	1780	44.0	m
1681	57.4	40.2	1731	55.5	44.2	1781	37.6	m
1682	57.6	36.9	1732	55.9	46.4	1782	47.2	0.0
1683	57.5	34.2	1733	55.8	48.3	1783	56.8	m
1684	57.4	31.1	1734	55.6	49.1	1784	47.5	m
1685	57.5	25.9	1735	55.8	49.3	1785	42.9	m
1686	57.5	20.7	1736	55.9	47.7	1786	31.6	m
1687	57.6	16.4	1737	55.9	47.4	1787	25.8	m
1688	57.6	12.4	1738	55.8	46.9	1788	19.9	m

Time *s*	*Norm. Speed per cent*	*Norm. Torque per cent*	*Time* *s*	*Norm. Speed per cent*	*Norm. Torque per cent*	*Time* *s*	*Norm. Speed per cent*	*Norm. Torque per cent*
1789	14.0	m						
1790	8.1	m						
1791	2.2	m						
1792	0.0	0.0						
1793	0.0	0.0						
1794	0.0	0.0						
1795	0.0	0.0						
1796	0.0	0.0						
1797	0.0	0.0						
1798	0.0	0.0						
1799	0.0	0.0						
1800	0.0	0.0						

m = motoring

(b) WHVC vehicle schedule

P = rated power of hybrid system as specified in Annex 9 or Annex 10, respectively

Road gradient from the previous time step shall be used where a placeholder (…) is set.

Time	*Vehicle speed*	*Road gradient*
s	*km/h*	*per cent*
1	0	+5.02E-06×P² -6.80E-03×P +0.77
2	0	…
3	0	…
4	0	…
5	0	…
6	0	…
7	2.35	…
8	5.57	…
9	8.18	…
10	9.37	…
11	9.86	…
12	10.18	…
13	10.38	…
14	10.57	…
15	10.95	…
16	11.56	…
17	12.22	…
18	12.97	…
19	14.33	…
20	16.38	…
21	18.4	…
22	19.86	…
23	20.85	…
24	21.52	…
25	21.89	…
26	21.98	…
27	21.91	+1.67E-06×P² -2.27E-03×P +0.26
28	21.68	-1.67E-06×P² +2.27E-03×P -0.26
29	21.21	-5.02E-06×P² +6.80E-03×P -0.77
30	20.44	…
31	19.24	…
32	17.57	…
33	15.53	…
34	13.77	…
35	12.95	…
36	12.95	…
37	13.35	…
38	13.75	…
39	13.82	…
40	13.41	…
41	12.26	…
42	9.82	…
43	5.96	…
44	2.2	…
45	0	…
46	0	…
47	0	-1.40E-06×P² +2.31E-03×P -0.81
48	0	+2.22E-06×P² -2.19E-03×P -0.86
49	0	+5.84E-06×P² -6.68E-03×P -0.91
50	1.87	…
51	4.97	…
52	8.4	…
53	9.9	…
54	11.42	…
55	15.11	…
56	18.46	…
57	20.21	…
58	22.13	…
59	24.17	…
60	25.56	…
61	26.97	…
62	28.83	…
63	31.05	…
64	33.72	…
65	36	…
66	37.91	…
67	39.65	…
68	41.23	…
69	42.85	…
70	44.1	…
71	44.37	…
72	44.3	…
73	44.17	…
74	44.13	…
75	44.17	…
76	44.51	+3.10E-06×P² -3.89E-03×P -0.76
77	45.16	+3.54E-07×P² -1.10E-03×P -0.61
78	45.64	-2.39E-06×P² +1.69E-03×P -0.47
79	46.16	…
80	46.99	…
81	48.19	…
82	49.32	…
83	49.7	…
84	49.5	…

Time	*Vehicle speed*	*Road gradient*
s	*km/h*	*per cent*
85	48.98	…
86	48.65	…
87	48.65	…
88	48.87	…
89	48.97	…
90	48.96	…
91	49.15	…
92	49.51	…
93	49.74	…
94	50.31	…
95	50.78	…
96	50.75	…
97	50.78	…
98	51.21	…
99	51.6	…
100	51.89	…
101	52.04	…
102	51.99	…
103	51.99	…
104	52.36	…
105	52.58	…
106	52.47	…
107	52.03	…
108	51.46	…
109	51.31	…
110	51.45	…
111	51.48	…
112	51.29	…
113	51.12	…
114	50.96	…
115	50.81	…
116	50.86	…
117	51.34	…
118	51.68	…
119	51.58	…
120	51.36	…
121	51.39	…
122	50.98	$-1.91E-06\times P^2 +1.91E-03\times P -0.06$
123	48.63	$-1.43E-06\times P^2 +2.13E-03\times P +0.34$
124	44.83	$-9.50E-07\times P^2 +2.35E-03\times P +0.74$
125	40.3	…
126	35.65	…
127	30.23	…
128	24.08	…
129	18.96	…
130	14.19	…
131	8.72	…

Time	*Vehicle speed*	*Road gradient*
s	*km/h*	*per cent*
132	3.41	…
133	0.64	…
134	0	…
135	0	…
136	0	…
137	0	…
138	0	$+2.18E-06\times P^2 -1.58E-03\times P +1.27$
139	0	$+5.31E-06\times P^2 -5.52E-03\times P +1.80$
140	0	$+8.44E-06\times P^2 -9.46E-03\times P +2.33$
141	0	…
142	0.63	…
143	1.56	…
144	2.99	…
145	4.5	…
146	5.39	…
147	5.59	…
148	5.45	…
149	5.2	…
150	4.98	…
151	4.61	…
152	3.89	…
153	3.21	…
154	2.98	…
155	3.31	…
156	4.18	…
157	5.07	…
158	5.52	…
159	5.73	…
160	6.06	…
161	6.76	…
162	7.7	…
163	8.34	…
164	8.51	…
165	8.22	…
166	7.22	…
167	5.82	…
168	4.75	…
169	4.24	…
170	4.05	…
171	3.98	…
172	3.91	…
173	3.86	…
174	4.17	…
175	5.32	…
176	7.53	…
177	10.89	…
178	14.81	…

Time	*Vehicle speed*	*Road gradient*
s	*km/h*	*per cent*
179	17.56	…
180	18.38	+2.81E-06×P² -3.15E-03×P +0.78
181	17.49	-2.81E-06×P² +3.15E-03×P -0.78
182	15.18	-8.44E-06×P² +9.46E-03×P -2.33
183	13.08	…
184	12.23	…
185	12.03	…
186	11.72	…
187	10.69	…
188	8.68	…
189	6.2	…
190	4.07	…
191	2.65	…
192	1.92	…
193	1.69	…
194	1.68	…
195	1.66	…
196	1.53	…
197	1.3	…
198	1	…
199	0.77	…
200	0.63	…
201	0.59	…
202	0.59	…
203	0.57	…
204	0.53	…
205	0.5	…
206	0	…
207	0	…
208	0	…
209	0	…
210	0	…
211	0	…
212	0	…
213	0	…
214	0	…
215	0	…
216	0	…
217	0	-5.63E-06×P² +6.31E-03×P -1.56
218	0	-2.81E-06×P² +3.15E-03×P -0.78
219	0	+0.00E+00×P² +0.00E+00×P +0.00
220	0	…
221	0	…
222	0	…
223	0	…
224	0	…
225	0	…

Time	*Vehicle speed*	*Road gradient*
s	*km/h*	*per cent*
226	0.73	…
227	0.73	…
228	0	…
229	0	…
230	0	…
231	0	…
232	0	…
233	0	…
234	0	…
235	0	…
236	0	…
237	0	…
238	0	…
239	0	…
240	0	…
241	0	…
242	0	+6.51E-06×P² -6.76E-03×P +1.50
243	0	+1.30E-05×P² -1.35E-02×P +3.00
244	0	+1.95E-05×P² -2.03E-02×P +4.49
245	0	…
246	0	…
247	0	…
248	0	…
249	0	…
250	0	…
251	0	…
252	0	…
253	1.51	…
254	4.12	…
255	7.02	…
256	9.45	…
257	11.86	…
258	14.52	…
259	17.01	…
260	19.48	…
261	22.38	…
262	24.75	…
263	25.55	+6.51E-06×P² -6.76E-03×P +1.50
264	25.18	-6.51E-06×P² +6.76E-03×P -1.50
265	23.94	-1.95E-05×P² +2.03E-02×P -4.49
266	22.35	…
267	21.28	…
268	20.86	…
269	20.65	…
270	20.18	…
271	19.33	…
272	18.23	…

Time	*Vehicle speed*	*Road gradient*
s	*km/h*	*per cent*
273	16.99	…
274	15.56	…
275	13.76	…
276	11.5	…
277	8.68	…
278	5.2	…
279	1.99	…
280	0	…
281	0	-1.30E-05×P² +1.35E-02×P -3.00
282	0	-6.51E-06×P² +6.76E-03×P -1.50
283	0.5	+0.00E+00×P² +0.00E+00×P +0.00
284	0.57	…
285	0.6	…
286	0.58	…
287	0	…
288	0	…
289	0	…
290	0	…
291	0	…
292	0	…
293	0	…
294	0	…
295	0	…
296	0	…
297	0	…
298	0	…
299	0	…
300	0	…
301	0	…
302	0	…
303	0	…
304	0	…
305	0	+5.21E-06×P² -5.86E-03×P -0.21
306	0	+1.04E-05×P² -1.17E-02×P -0.42
307	0	+1.56E-05×P² -1.76E-02×P -0.62
308	0	…
309	0	…
310	0	…
311	0	…
312	0	…
313	0	…
314	0	…
315	0	…
316	0	…
317	0	…
318	0	…
319	0	…

Time	*Vehicle speed*	*Road gradient*
s	*km/h*	*per cent*
320	0	…
321	0	…
322	0	…
323	0	…
324	3.01	…
325	8.14	…
326	13.88	…
327	18.08	…
328	20.01	…
329	20.3	+5.21E-06×P² -5.86E-03×P -0.21
330	19.53	-5.21E-06×P² +5.86E-03×P +0.21
331	17.92	-1.56E-05×P² +1.76E-02×P +0.62
332	16.17	…
333	14.55	…
334	12.92	…
335	11.07	…
336	8.54	…
337	5.15	…
338	1.96	…
339	0	…
340	0	…
341	0	…
342	0	…
343	0	…
344	0	…
345	0	…
346	0	-6.53E-06×P² +7.62E-03×P +1.11
347	0	+2.58E-06×P² -2.34E-03×P +1.60
348	0	+1.17E-05×P² -1.23E-02×P +2.08
349	0	…
350	0	…
351	0	…
352	0	…
353	0	…
354	0.9	…
355	2	…
356	4.08	…
357	7.07	…
358	10.25	…
359	12.77	…
360	14.44	…
361	15.73	…
362	17.23	…
363	19.04	…
364	20.96	…
365	22.94	…
366	25.05	…

Time	*Vehicle speed*	*Road gradient*
s	*km/h*	*per cent*
367	27.31	…
368	29.54	…
369	31.52	…
370	33.19	…
371	34.67	…
372	36.13	…
373	37.63	…
374	39.07	…
375	40.08	…
376	40.44	…
377	40.26	$+6.91E-06\times P^2 -7.10E-03\times P +0.94$
378	39.29	$+2.13E-06\times P^2 -1.91E-03\times P -0.20$
379	37.23	$-2.65E-06\times P^2 +3.28E-03\times P -1.33$
380	34.14	…
381	30.18	…
382	25.71	…
383	21.58	…
384	18.5	…
385	16.56	…
386	15.39	…
387	14.77	$+2.55E-06\times P^2 -2.25E-03\times P +0.26$
388	14.58	$+7.75E-06\times P^2 -7.79E-03\times P +1.86$
389	14.72	$+1.30E-05\times P^2 -1.33E-02\times P +3.46$
390	15.44	…
391	16.92	…
392	18.69	…
393	20.26	…
394	21.63	…
395	22.91	…
396	24.13	…
397	25.18	…
398	26.16	…
399	27.41	…
400	29.18	…
401	31.36	…
402	33.51	…
403	35.33	…
404	36.94	…
405	38.6	…
406	40.44	…
407	42.29	…
408	43.73	…
409	44.47	…
410	44.62	…
411	44.41	$+8.17E-06\times P^2 -8.13E-03\times P +2.32$
412	43.96	$+3.39E-06\times P^2 -2.94E-03\times P +1.18$
413	43.41	$-1.39E-06\times P^2 +2.25E-03\times P +0.04$

Time	*Vehicle speed*	*Road gradient*
s	*km/h*	*per cent*
414	42.83	…
415	42.15	…
416	41.28	…
417	40.17	…
418	38.9	…
419	37.59	…
420	36.39	…
421	35.33	…
422	34.3	…
423	33.07	…
424	31.41	…
425	29.18	…
426	26.41	…
427	23.4	…
428	20.9	…
429	19.59	$+8.47E-07\times P^2 -6.08E-04\times P +0.36$
430	19.36	$+3.09E-06\times P^2 -3.47E-03\times P +0.69$
431	19.79	$+5.33E-06\times P^2 -6.33E-03\times P +1.01$
432	20.43	…
433	20.71	…
434	20.56	…
435	19.96	…
436	20.22	…
437	21.48	…
438	23.67	…
439	26.09	…
440	28.16	…
441	29.75	…
442	30.97	…
443	31.99	…
444	32.84	…
445	33.33	…
446	33.45	…
447	33.27	$+5.50E-07\times P^2 -1.13E-03\times P -0.13$
448	32.66	$-4.23E-06\times P^2 +4.06E-03\times P -1.26$
449	31.73	$-9.01E-06\times P^2 +9.25E-03\times P -2.40$
450	30.58	…
451	29.2	…
452	27.56	…
453	25.71	…
454	23.76	…
455	21.87	…
456	20.15	…
457	18.38	…
458	15.93	…
459	12.33	…
460	7.99	…

Time	*Vehicle speed*	*Road gradient*
s	*km/h*	*per cent*
461	4.19	…
462	1.77	…
463	0.69	-1.66E-06×P² +1.67E-03×P -0.86
464	1.13	+5.69E-06×P² -5.91E-03×P +0.68
465	2.2	+1.30E-05×P² -1.35E-02×P +2.23
466	3.59	…
467	4.88	…
468	5.85	…
469	6.72	…
470	8.02	…
471	10.02	…
472	12.59	…
473	15.43	…
474	18.32	…
475	21.19	…
476	24	…
477	26.75	…
478	29.53	…
479	32.31	…
480	34.8	…
481	36.73	…
482	38.08	…
483	39.11	…
484	40.16	…
485	41.18	…
486	41.75	…
487	41.87	+8.26E-06×P² -8.29E-03×P +1.09
488	41.43	+3.47E-06×P² -3.10E-03×P -0.05
489	39.99	-1.31E-06×P² +2.09E-03×P -1.19
490	37.71	…
491	34.93	…
492	31.79	…
493	28.65	…
494	25.92	…
495	23.91	…
496	22.81	+6.20E-07×P² -2.47E-04×P -0.38
497	22.53	+2.55E-06×P² -2.58E-03×P +0.43
498	22.62	+4.48E-06×P² -4.92E-03×P +1.23
499	22.95	…
500	23.51	…
501	24.04	…
502	24.45	…
503	24.81	…
504	25.29	…
505	25.99	…
506	26.83	…
507	27.6	…

Time	*Vehicle speed*	*Road gradient*
s	*km/h*	*per cent*
508	28.17	…
509	28.63	…
510	29.04	…
511	29.43	…
512	29.78	…
513	30.13	…
514	30.57	…
515	31.1	…
516	31.65	…
517	32.14	…
518	32.62	…
519	33.25	…
520	34.2	…
521	35.46	…
522	36.81	…
523	37.98	…
524	38.84	…
525	39.43	…
526	39.73	…
527	39.8	…
528	39.69	-3.04E-07×P² +2.73E-04×P +0.09
529	39.29	-5.09E-06×P² +5.46E-03×P -1.04
530	38.59	-9.87E-06×P² +1.07E-02×P -2.18
531	37.63	…
532	36.22	…
533	34.11	…
534	31.16	…
535	27.49	…
536	23.63	…
537	20.16	…
538	17.27	…
539	14.81	…
540	12.59	…
541	10.47	…
542	8.85	-5.09E-06×P² +5.46E-03×P -1.04
543	8.16	-1.63E-07×P² +4.68E-05×P +0.17
544	8.95	+4.76E-06×P² -5.37E-03×P +1.39
545	11.3	+4.90E-06×P² -5.60E-03×P +1.47
546	14.11	…
547	15.91	…
548	16.57	…
549	16.73	…
550	17.24	…
551	18.45	…
552	20.09	…
553	21.63	…
554	22.78	…

Time	*Vehicle speed*	*Road gradient*
s	*km/h*	*per cent*
555	23.59	…
556	24.23	…
557	24.9	…
558	25.72	…
559	26.77	…
560	28.01	…
561	29.23	…
562	30.06	…
563	30.31	…
564	30.29	+1.21E-07×P² -4.06E-04×P +0.33
565	30.05	-4.66E-06×P² +4.79E-03×P -0.81
566	29.44	-9.44E-06×P² +9.98E-03×P -1.95
567	28.6	…
568	27.63	…
569	26.66	…
570	26.03	-4.66E-06×P² +4.79E-03×P -0.81
571	25.85	+1.21E-07×P² -4.06E-04×P +0.33
572	26.14	+4.90E-06×P² -5.60E-03×P +1.47
573	27.08	…
574	28.42	…
575	29.61	…
576	30.46	…
577	30.99	…
578	31.33	…
579	31.65	…
580	32.02	…
581	32.39	…
582	32.68	…
583	32.84	…
584	32.93	…
585	33.22	…
586	33.89	…
587	34.96	…
588	36.28	…
589	37.58	…
590	38.58	…
591	39.1	…
592	39.22	…
593	39.11	…
594	38.8	…
595	38.31	…
596	37.73	…
597	37.24	…
598	37.06	…
599	37.1	…
600	37.42	…
601	38.17	…

Time	*Vehicle speed*	*Road gradient*
s	*km/h*	*per cent*
602	39.19	…
603	40.31	…
604	41.46	…
605	42.44	…
606	42.95	…
607	42.9	…
608	42.43	…
609	41.74	…
610	41.04	…
611	40.49	…
612	40.8	…
613	41.66	…
614	42.48	…
615	42.78	+1.21E-07×P² -4.06E-04×P +0.33
616	42.39	-4.66E-06×P² +4.79E-03×P -0.81
617	40.78	-9.44E-06×P² +9.98E-03×P -1.95
618	37.72	…
619	33.29	…
620	27.66	…
621	21.43	…
622	15.62	…
623	11.51	…
624	9.69	-4.66E-06×P² +4.79E-03×P -0.81
625	9.46	+1.21E-07×P² -4.06E-04×P +0.33
626	10.21	+4.90E-06×P² -5.60E-03×P +1.47
627	11.78	…
628	13.6	…
629	15.33	…
630	17.12	…
631	18.98	…
632	20.73	…
633	22.17	…
634	23.29	…
635	24.19	…
636	24.97	…
637	25.6	…
638	25.96	…
639	25.86	+1.21E-07×P² -4.06E-04×P +0.33
640	24.69	-4.66E-06×P² +4.79E-03×P -0.81
641	21.85	-9.44E-06×P² +9.98E-03×P -1.95
642	17.45	…
643	12.34	…
644	7.59	…
645	4	…
646	1.76	…
647	0	…
648	0	…

Time	*Vehicle speed*	*Road gradient*
s	*km/h*	*per cent*
649	0	…
650	0	…
651	0	…
652	0	-3.90E-06×P² +4.11E-03×P -1.07
653	0	+1.64E-06×P² -1.77E-03×P -0.19
654	0	+7.18E-06×P² -7.64E-03×P +0.70
655	0	…
656	0	…
657	0	…
658	2.96	…
659	7.9	…
660	13.49	…
661	18.36	…
662	22.59	…
663	26.26	…
664	29.4	…
665	32.23	…
666	34.91	…
667	37.39	…
668	39.61	…
669	41.61	…
670	43.51	…
671	45.36	…
672	47.17	…
673	48.95	…
674	50.73	…
675	52.36	…
676	53.74	…
677	55.02	…
678	56.24	…
679	57.29	…
680	58.18	…
681	58.95	…
682	59.49	…
683	59.86	…
684	60.3	…
685	61.01	…
686	61.96	…
687	63.05	…
688	64.16	…
689	65.14	…
690	65.85	…
691	66.22	…
692	66.12	+2.39E-06×P² -2.55E-03×P +0.23
693	65.01	-2.39E-06×P² +2.55E-03×P -0.23
694	62.22	-7.18E-06×P² +7.64E-03×P -0.70
695	57.44	…

Time	*Vehicle speed*	*Road gradient*
s	*km/h*	*per cent*
696	51.47	…
697	45.98	…
698	41.72	…
699	38.22	…
700	34.65	…
701	30.65	…
702	26.46	…
703	22.32	…
704	18.15	…
705	13.79	…
706	9.29	…
707	4.98	…
708	1.71	…
709	0	…
710	0	…
711	0	…
712	0	…
713	0	…
714	0	…
715	0	…
716	0	…
717	0	…
718	0	…
719	0	…
720	0	…
721	0	…
722	0	…
723	0	…
724	0	…
725	0	…
726	0	…
727	0	…
728	0	…
729	0	…
730	0	…
731	0	…
732	0	…
733	0	…
734	0	…
735	0	…
736	0	…
737	0	…
738	0	…
739	0	-2.53E-06×P² +2.43E-03×P +0.05
740	0	+2.12E-06×P² -2.78E-03×P +0.81
741	0	+6.77E-06×P² -7.99E-03×P +1.56
742	0	…

Time	*Vehicle speed*	*Road gradient*
s	*km/h*	*per cent*
743	0	…
744	0	…
745	0	…
746	0	…
747	0	…
748	0	…
749	0	…
750	0	…
751	0	…
752	0	…
753	0	…
754	0	…
755	0	…
756	0	…
757	0	…
758	0	…
759	0	…
760	0	…
761	0	…
762	0	…
763	0	…
764	0	…
765	0	…
766	0	…
767	0	…
768	0	…
769	0	…
770	0	…
771	0	…
772	1.6	…
773	5.03	…
774	9.49	…
775	13	…
776	14.65	…
777	15.15	…
778	15.67	…
779	16.76	…
780	17.88	…
781	18.33	…
782	18.31	+2.26E-06×P² -2.66E-03×P +0.52
783	18.05	-2.26E-06×P² +2.66E-03×P -0.52
784	17.39	-6.77E-06×P² +7.99E-03×P -1.56
785	16.35	…
786	14.71	…
787	11.71	…
788	7.81	…
789	5.25	-2.26E-06×P² +2.66E-03×P -0.52
790	4.62	+2.26E-06×P² -2.66E-03×P +0.52
791	5.62	+6.77E-06×P² -7.99E-03×P +1.56
792	8.24	…
793	10.98	…
794	13.15	…
795	15.47	…
796	18.19	…
797	20.79	…
798	22.5	…
799	23.19	…
800	23.54	…
801	24.2	…
802	25.17	…
803	26.28	…
804	27.69	…
805	29.72	…
806	32.17	…
807	34.22	…
808	35.31	…
809	35.74	…
810	36.23	…
811	37.34	…
812	39.05	…
813	40.76	…
814	41.82	…
815	42.12	…
816	42.08	…
817	42.27	…
818	43.03	…
819	44.14	…
820	45.13	…
821	45.84	…
822	46.4	…
823	46.89	…
824	47.34	…
825	47.66	…
826	47.77	…
827	47.78	…
828	47.64	+2.26E-06×P² -2.66E-03×P +0.52
829	47.23	-2.26E-06×P² +2.66E-03×P -0.52
830	46.66	-6.77E-06×P² +7.99E-03×P -1.56
831	46.08	…
832	45.45	…
833	44.69	…
834	43.73	…
835	42.55	…
836	41.14	…

Time	*Vehicle speed*	*Road gradient*
s	*km/h*	*per cent*
837	39.56	…
838	37.93	…
839	36.69	…
840	36.27	…
841	36.42	…
842	37.14	…
843	38.13	…
844	38.55	…
845	38.42	…
846	37.89	…
847	36.89	…
848	35.53	…
849	34.01	…
850	32.88	-2.26E-06×P² +2.66E-03×P -0.52
851	32.52	+2.26E-06×P² -2.66E-03×P +0.52
852	32.7	+6.77E-06×P² -7.99E-03×P +1.56
853	33.48	…
854	34.97	…
855	36.78	…
856	38.64	…
857	40.48	…
858	42.34	…
859	44.16	…
860	45.9	…
861	47.55	…
862	49.09	…
863	50.42	…
864	51.49	…
865	52.23	…
866	52.58	…
867	52.63	…
868	52.49	+2.26E-06×P² -2.66E-03×P +0.52
869	52.19	-2.26E-06×P² +2.66E-03×P -0.52
870	51.82	-6.77E-06×P² +7.99E-03×P -1.56
871	51.43	…
872	51.02	…
873	50.61	…
874	50.26	…
875	50.06	…
876	49.97	…
877	49.67	…
878	48.86	…
879	47.53	…
880	45.82	…
881	43.66	…
882	40.91	…
883	37.78	…

Time	*Vehicle speed*	*Road gradient*
s	*km/h*	*per cent*
884	34.89	…
885	32.69	…
886	30.99	…
887	29.31	…
888	27.29	…
889	24.79	…
890	21.78	…
891	18.51	…
892	15.1	…
893	11.06	…
894	6.28	…
895	2.24	…
896	0	…
897	0	…
898	0	…
899	0	-3.61E-06×P² +4.12E-03×P -0.93
900	0	-4.47E-07×P² +2.44E-04×P -0.31
901	0	+2.71E-06×P² -3.63E-03×P +0.32
902	2.56	…
903	4.81	…
904	6.38	…
905	8.62	…
906	10.37	…
907	11.17	…
908	13.32	…
909	15.94	…
910	16.89	…
911	17.13	…
912	18.04	…
913	19.96	…
914	22.05	…
915	23.65	…
916	25.72	…
917	28.62	…
918	31.99	…
919	35.07	…
920	37.42	…
921	39.65	…
922	41.78	…
923	43.04	…
924	43.55	…
925	42.97	…
926	41.08	…
927	40.38	…
928	40.43	…
929	40.4	…
930	40.25	…

Time	*Vehicle speed*	*Road gradient*
s	*km/h*	*per cent*
931	40.32	…
932	40.8	…
933	41.71	…
934	43.16	…
935	44.84	…
936	46.42	…
937	47.91	…
938	49.08	…
939	49.66	…
940	50.15	…
941	50.94	…
942	51.69	…
943	53.5	…
944	55.9	…
945	57.11	…
946	57.88	…
947	58.63	…
948	58.75	…
949	58.26	…
950	58.03	…
951	58.28	…
952	58.67	…
953	58.76	…
954	58.82	…
955	59.09	…
956	59.38	…
957	59.72	…
958	60.04	…
959	60.13	$+2.08E-06\times P^2 -2.00E-03\times P +0.46$
960	59.33	$+1.44E-06\times P^2 -3.72E-04\times P +0.61$
961	58.52	$+8.03E-07\times P^2 +1.26E-03\times P +0.75$
962	57.82	…
963	56.68	…
964	55.36	…
965	54.63	…
966	54.04	…
967	53.15	…
968	52.02	$+1.44E-06\times P^2 -3.72E-04\times P +0.61$
969	51.37	$+2.08E-06\times P^2 -2.00E-03\times P +0.46$
970	51.41	$+2.71E-06\times P^2 -3.63E-03\times P +0.32$
971	52.2	…
972	53.52	…
973	54.34	…
974	54.59	…
975	54.92	…
976	55.69	…
977	56.51	…

Time	*Vehicle speed*	*Road gradient*
s	*km/h*	*per cent*
978	56.73	$+2.08E-06\times P^2 -2.00E-03\times P +0.46$
979	56.33	$+1.44E-06\times P^2 -3.72E-04\times P +0.61$
980	55.38	$+8.03E-07\times P^2 +1.26E-03\times P +0.75$
981	54.99	…
982	54.75	…
983	54.11	…
984	53.32	…
985	52.41	…
986	51.45	…
987	50.86	…
988	50.48	…
989	49.6	…
990	48.55	…
991	47.87	…
992	47.42	…
993	46.86	…
994	46.08	…
995	45.07	…
996	43.58	…
997	41.04	…
998	38.39	…
999	35.69	…
1000	32.68	…
1001	29.82	…
1002	26.97	…
1003	24.03	…
1004	21.67	…
1005	20.34	…
1006	18.9	…
1007	16.21	…
1008	13.84	…
1009	12.25	…
1010	10.4	…
1011	7.94	…
1012	6.05	$+1.48E-07\times P^2 +2.76E-04\times P +0.25$
1013	5.67	$-5.06E-07\times P^2 -7.04E-04\times P -0.26$
1014	6.03	$-1.16E-06\times P^2 -1.68E-03\times P -0.77$
1015	7.68	…
1016	10.97	…
1017	14.72	…
1018	17.32	…
1019	18.59	…
1020	19.35	…
1021	20.54	…
1022	21.33	…
1023	22.06	…
1024	23.39	…

Time	*Vehicle speed*	*Road gradient*
s	*km/h*	*per cent*
1025	25.52	…
1026	28.28	…
1027	30.38	…
1028	31.22	…
1029	32.22	…
1030	33.78	…
1031	35.08	…
1032	35.91	…
1033	36.06	…
1034	35.5	…
1035	34.76	…
1036	34.7	…
1037	35.41	…
1038	36.65	…
1039	37.57	…
1040	38.51	…
1041	39.88	…
1042	41.25	…
1043	42.07	…
1044	43.03	…
1045	44.4	…
1046	45.14	…
1047	45.44	…
1048	46.13	…
1049	46.79	…
1050	47.45	…
1051	48.68	…
1052	50.13	…
1053	51.16	…
1054	51.37	…
1055	51.3	…
1056	51.15	…
1057	50.88	…
1058	50.63	…
1059	50.2	…
1060	49.12	…
1061	48.02	…
1062	47.7	…
1063	47.93	…
1064	48.57	…
1065	48.88	…
1066	49.03	…
1067	48.94	…
1068	48.32	…
1069	47.97	…
1070	47.92	$-1.80E-06\times P^2 -5.59E-05\times P -0.62$
1071	47.54	$-2.43E-06\times P^2 +1.57E-03\times P -0.48$

Time	*Vehicle speed*	*Road gradient*
s	*km/h*	*per cent*
1072	46.79	$-3.07E-06\times P^2 +3.20E-03\times P -0.34$
1073	46.13	…
1074	45.73	…
1075	45.17	…
1076	44.43	…
1077	43.59	…
1078	42.68	…
1079	41.89	…
1080	41.09	…
1081	40.38	…
1082	39.99	…
1083	39.84	…
1084	39.46	…
1085	39.15	…
1086	38.9	…
1087	38.67	…
1088	39.03	…
1089	40.37	…
1090	41.03	…
1091	40.76	…
1092	40.02	…
1093	39.6	…
1094	39.37	…
1095	38.84	…
1096	37.93	…
1097	37.19	…
1098	36.21	$-2.43E-06\times P^2 +1.57E-03\times P -0.48$
1099	35.32	$-1.80E-06\times P^2 -5.59E-05\times P -0.62$
1100	35.56	$-1.16E-06\times P^2 -1.68E-03\times P -0.77$
1101	36.96	…
1102	38.12	…
1103	38.71	…
1104	39.26	…
1105	40.64	…
1106	43.09	…
1107	44.83	…
1108	45.33	…
1109	45.24	…
1110	45.14	…
1111	45.06	…
1112	44.82	…
1113	44.53	…
1114	44.77	…
1115	45.6	…
1116	46.28	…
1117	47.18	…
1118	48.49	…

Time	*Vehicle speed*	*Road gradient*
s	*km/h*	*per cent*
1119	49.42	…
1120	49.56	…
1121	49.47	…
1122	49.28	…
1123	48.58	…
1124	48.03	…
1125	48.2	…
1126	48.72	…
1127	48.91	…
1128	48.93	…
1129	49.05	…
1130	49.23	…
1131	49.28	$-1.80E-06\times P^2 -5.59E-05\times P -0.62$
1132	48.84	$-2.43E-06\times P^2 +1.57E-03\times P -0.48$
1133	48.12	$-3.07E-06\times P^2 +3.20E-03\times P -0.34$
1134	47.8	…
1135	47.42	…
1136	45.98	…
1137	42.96	…
1138	39.38	…
1139	35.82	…
1140	31.85	…
1141	26.87	…
1142	21.41	…
1143	16.41	…
1144	12.56	…
1145	10.41	…
1146	9.07	…
1147	7.69	…
1148	6.28	…
1149	5.08	…
1150	4.32	…
1151	3.32	…
1152	1.92	…
1153	1.07	…
1154	0.66	…
1155	0	…
1156	0	…
1157	0	…
1158	0	…
1159	0	…
1160	0	…
1161	0	…
1162	0	…
1163	0	…
1164	0	…
1165	0	…

Time	*Vehicle speed*	*Road gradient*
s	*km/h*	*per cent*
1166	0	…
1167	0	…
1168	0	…
1169	0	…
1170	0	…
1171	0	…
1172	0	…
1173	0	…
1174	0	…
1175	0	$-7.73E-07\times P^2 +5.68E-04\times P +0.07$
1176	0	$+1.53E-06\times P^2 -2.06E-03\times P +0.47$
1177	0	$+3.82E-06\times P^2 -4.70E-03\times P +0.87$
1178	0	…
1179	0	…
1180	0	…
1181	0	…
1182	0	…
1183	0	…
1184	0	…
1185	0	…
1186	0	…
1187	0	…
1188	0	…
1189	0	…
1190	0	…
1191	0	…
1192	0	…
1193	0	…
1194	0	…
1195	0	…
1196	1.54	…
1197	4.85	…
1198	9.06	…
1199	11.8	…
1200	12.42	…
1201	12.07	…
1202	11.64	…
1203	11.69	…
1204	12.91	…
1205	15.58	…
1206	18.69	…
1207	21.04	…
1208	22.62	…
1209	24.34	…
1210	26.74	…
1211	29.62	…
1212	32.65	…

Time	*Vehicle speed*	*Road gradient*
s	*km/h*	*per cent*
1213	35.57	…
1214	38.07	…
1215	39.71	…
1216	40.36	…
1217	40.6	…
1218	41.15	…
1219	42.23	…
1220	43.61	…
1221	45.08	…
1222	46.58	…
1223	48.13	…
1224	49.7	…
1225	51.27	…
1226	52.8	…
1227	54.3	…
1228	55.8	…
1229	57.29	…
1230	58.73	…
1231	60.12	…
1232	61.5	…
1233	62.94	…
1234	64.39	…
1235	65.52	…
1236	66.07	…
1237	66.19	…
1238	66.19	…
1239	66.43	…
1240	67.07	…
1241	68.04	…
1242	69.12	…
1243	70.08	…
1244	70.91	…
1245	71.73	…
1246	72.66	…
1247	73.67	…
1248	74.55	…
1249	75.18	…
1250	75.59	…
1251	75.82	…
1252	75.9	…
1253	75.92	…
1254	75.87	…
1255	75.68	…
1256	75.37	…
1257	75.01	$+7.07E\text{-}06\times P^2 -7.30E\text{-}03\times P +1.19$
1258	74.55	$+1.03E\text{-}05\times P^2 -9.91E\text{-}03\times P +1.51$
1259	73.8	$+1.36E\text{-}05\times P^2 -1.25E\text{-}02\times P +1.83$

Time	*Vehicle speed*	*Road gradient*
s	*km/h*	*per cent*
1260	72.71	…
1261	71.39	…
1262	70.02	…
1263	68.71	…
1264	67.52	…
1265	66.44	…
1266	65.45	…
1267	64.49	…
1268	63.54	…
1269	62.6	…
1270	61.67	…
1271	60.69	…
1272	59.64	…
1273	58.6	…
1274	57.64	…
1275	56.79	…
1276	55.95	…
1277	55.09	…
1278	54.2	…
1279	53.33	…
1280	52.52	…
1281	51.75	…
1282	50.92	…
1283	49.9	…
1284	48.68	…
1285	47.41	…
1286	46.5	$+1.06E\text{-}05\times P^2 -1.01E\text{-}02\times P +1.57$
1287	46.22	$+7.62E\text{-}06\times P^2 -7.70E\text{-}03\times P +1.30$
1288	46.44	$+4.65E\text{-}06\times P^2 -5.29E\text{-}03\times P +1.03$
1289	47.35	…
1290	49.01	…
1291	50.93	…
1292	52.79	…
1293	54.66	…
1294	56.6	…
1295	58.55	…
1296	60.47	…
1297	62.28	…
1298	63.9	…
1299	65.2	…
1300	66.02	…
1301	66.39	…
1302	66.74	…
1303	67.43	…
1304	68.44	…
1305	69.52	…
1306	70.53	…

Time	*Vehicle speed*	*Road gradient*
s	*km/h*	*per cent*
1307	71.47	…
1308	72.32	…
1309	72.89	…
1310	73.07	…
1311	73.03	+2.39E-06×P² -3.13E-03×P +0.89
1312	72.94	+1.26E-07×P² -9.74E-04×P +0.74
1313	73.01	-2.14E-06×P² +1.18E-03×P +0.60
1314	73.44	…
1315	74.19	…
1316	74.81	…
1317	75.01	…
1318	74.99	…
1319	74.79	…
1320	74.41	…
1321	74.07	…
1322	73.77	…
1323	73.38	…
1324	72.79	…
1325	71.95	…
1326	71.06	…
1327	70.45	…
1328	70.23	…
1329	70.24	…
1330	70.32	…
1331	70.3	…
1332	70.05	…
1333	69.66	…
1334	69.26	+1.12E-06×P² -1.42E-03×P +0.92
1335	68.73	+4.37E-06×P² -4.03E-03×P +1.24
1336	67.88	+7.62E-06×P² -6.64E-03×P +1.56
1337	66.68	…
1338	65.29	…
1339	63.95	…
1340	62.84	+4.37E-06×P² -4.03E-03×P +1.24
1341	62.21	+1.12E-06×P² -1.42E-03×P +0.92
1342	62.04	-2.14E-06×P² +1.18E-03×P +0.60
1343	62.26	…
1344	62.87	…
1345	63.55	…
1346	64.12	…
1347	64.73	…
1348	65.45	…
1349	66.18	…
1350	66.97	…
1351	67.85	…
1352	68.74	…
1353	69.45	…

Time	*Vehicle speed*	*Road gradient*
s	*km/h*	*per cent*
1354	69.92	…
1355	70.24	…
1356	70.49	…
1357	70.63	…
1358	70.68	…
1359	70.65	…
1360	70.49	+1.12E-06×P² -1.42E-03×P +0.92
1361	70.09	+4.37E-06×P² -4.03E-03×P +1.24
1362	69.35	+7.62E-06×P² -6.64E-03×P +1.56
1363	68.27	…
1364	67.09	…
1365	65.96	…
1366	64.87	…
1367	63.79	…
1368	62.82	+4.37E-06×P² -4.03E-03×P +1.24
1369	63.03	+1.12E-06×P² -1.42E-03×P +0.92
1370	63.62	-2.14E-06×P² +1.18E-03×P +0.60
1371	64.8	…
1372	65.5	…
1373	65.33	+1.12E-06×P² -1.42E-03×P +0.92
1374	63.83	+4.37E-06×P² -4.03E-03×P +1.24
1375	62.44	+7.62E-06×P² -6.64E-03×P +1.56
1376	61.2	…
1377	59.58	…
1378	57.68	…
1379	56.4	…
1380	54.82	…
1381	52.77	+6.78E-06×P² -6.35E-03×P +2.06
1382	52.22	+5.95E-06×P² -6.07E-03×P +2.56
1383	52.48	+5.11E-06×P² -5.78E-03×P +3.06
1384	52.74	…
1385	53.14	…
1386	53.03	…
1387	52.55	…
1388	52.19	…
1389	51.09	…
1390	49.88	…
1391	49.37	…
1392	49.26	…
1393	49.37	…
1394	49.88	…
1395	50.25	…
1396	50.17	…
1397	50.5	…
1398	50.83	…
1399	51.23	…
1400	51.67	…

Time	*Vehicle speed*	*Road gradient*
s	*km/h*	*per cent*
1401	51.53	…
1402	50.17	…
1403	49.99	…
1404	50.32	…
1405	51.05	…
1406	51.45	…
1407	52	…
1408	52.3	…
1409	52.22	…
1410	52.66	…
1411	53.18	…
1412	53.8	…
1413	54.53	…
1414	55.37	…
1415	56.29	…
1416	57.31	…
1417	57.94	…
1418	57.86	…
1419	57.75	…
1420	58.67	…
1421	59.4	…
1422	59.69	…
1423	60.02	…
1424	60.21	…
1425	60.83	…
1426	61.16	…
1427	61.6	…
1428	62.15	…
1429	62.7	$+2.30E\text{-}06\times P^2 -3.18E\text{-}03\times P +1.81$
1430	63.65	$-5.04E\text{-}07\times P^2 -5.74E\text{-}04\times P +0.57$
1431	64.27	$-3.31E\text{-}06\times P^2 +2.03E\text{-}03\times P -0.68$
1432	64.31	…
1433	64.13	…
1434	64.27	…
1435	65.22	…
1436	66.25	…
1437	67.09	…
1438	68.37	…
1439	69.36	…
1440	70.57	…
1441	71.89	…
1442	73.35	…
1443	74.64	…
1444	75.81	…
1445	77.24	…
1446	78.63	…
1447	79.32	…

Time	*Vehicle speed*	*Road gradient*
s	*km/h*	*per cent*
1448	80.2	…
1449	81.67	…
1450	82.11	…
1451	82.91	…
1452	83.43	…
1453	83.79	…
1454	83.5	…
1455	84.01	…
1456	83.43	…
1457	82.99	…
1458	82.77	…
1459	82.33	…
1460	81.78	…
1461	81.81	…
1462	81.05	…
1463	80.72	$-6.93E\text{-}06\times P^2 +5.24E\text{-}03\times P -1.21$
1464	80.61	$-1.05E\text{-}05\times P^2 +8.45E\text{-}03\times P -1.74$
1465	80.46	$-1.42E\text{-}05\times P^2 +1.17E\text{-}02\times P -2.27$
1466	80.42	…
1467	80.42	…
1468	80.24	…
1469	80.13	…
1470	80.39	…
1471	80.72	…
1472	81.01	…
1473	81.52	…
1474	82.4	…
1475	83.21	…
1476	84.05	…
1477	84.85	…
1478	85.42	…
1479	86.18	…
1480	86.45	…
1481	86.64	…
1482	86.57	…
1483	86.43	…
1484	86.58	…
1485	86.8	…
1486	86.65	…
1487	86.14	…
1488	86.36	…
1489	86.32	…
1490	86.25	…
1491	85.92	…
1492	86.14	…
1493	86.36	…
1494	86.25	…

Time	*Vehicle speed*	*Road gradient*
s	*km/h*	*per cent*
1495	86.5	…
1496	86.14	…
1497	86.29	…
1498	86.4	…
1499	86.36	…
1500	85.63	…
1501	86.03	…
1502	85.92	…
1503	86.14	…
1504	86.32	…
1505	85.92	…
1506	86.11	…
1507	85.91	…
1508	85.83	…
1509	85.86	$-1.09E-05\times P^2 +9.06E-03\times P -1.95$
1510	85.5	$-7.66E-06\times P^2 +6.45E-03\times P -1.63$
1511	84.97	$-4.41E-06\times P^2 +3.84E-03\times P -1.31$
1512	84.8	…
1513	84.2	…
1514	83.26	…
1515	82.77	…
1516	81.78	…
1517	81.16	…
1518	80.42	…
1519	79.21	…
1520	78.83	…
1521	78.52	$-5.24E-06\times P^2 +4.57E-03\times P -1.18$
1522	78.52	$-6.08E-06\times P^2 +5.30E-03\times P -1.06$
1523	78.81	$-6.91E-06\times P^2 +6.04E-03\times P -0.93$
1524	79.26	…
1525	79.61	…
1526	80.15	…
1527	80.39	…
1528	80.72	…
1529	81.01	…
1530	81.52	…
1531	82.4	…
1532	83.21	…
1533	84.05	…
1534	85.15	…
1535	85.92	…
1536	86.98	…
1537	87.45	…
1538	87.54	…
1539	87.25	…
1540	87.04	…
1541	86.98	…

Time	*Vehicle speed*	*Road gradient*
s	*km/h*	*per cent*
1542	87.05	…
1543	87.1	…
1544	87.25	…
1545	87.25	…
1546	87.07	…
1547	87.29	…
1548	87.14	…
1549	87.03	…
1550	87.25	…
1551	87.03	…
1552	87.03	…
1553	87.07	…
1554	86.81	…
1555	86.92	…
1556	86.66	…
1557	86.92	…
1558	86.59	…
1559	86.92	…
1560	86.59	…
1561	86.88	…
1562	86.7	…
1563	86.81	…
1564	86.81	…
1565	86.81	…
1566	86.81	…
1567	86.99	…
1568	87.03	…
1569	86.92	…
1570	87.1	…
1571	86.85	…
1572	87.14	…
1573	86.96	…
1574	86.85	…
1575	86.77	…
1576	86.81	…
1577	86.85	…
1578	86.74	…
1579	86.81	…
1580	86.7	…
1581	86.52	…
1582	86.7	…
1583	86.74	…
1584	86.81	…
1585	86.85	…
1586	86.92	…
1587	86.88	…
1588	86.85	…

Time	*Vehicle speed*	*Road gradient*
s	*km/h*	*per cent*
1589	87.1	…
1590	86.81	…
1591	86.99	…
1592	86.81	…
1593	87.14	…
1594	86.81	…
1595	86.85	…
1596	87.03	…
1597	86.92	…
1598	87.14	…
1599	86.92	…
1600	87.03	…
1601	86.99	…
1602	86.96	…
1603	87.03	…
1604	86.85	…
1605	87.1	…
1606	86.81	…
1607	87.03	…
1608	86.77	…
1609	86.99	…
1610	86.96	…
1611	86.96	…
1612	87.07	…
1613	86.96	…
1614	86.92	…
1615	87.07	…
1616	86.92	…
1617	87.14	…
1618	86.96	…
1619	87.03	…
1620	86.85	…
1621	86.77	…
1622	87.1	…
1623	86.92	…
1624	87.07	…
1625	86.85	…
1626	86.81	…
1627	87.14	…
1628	86.77	…
1629	87.03	…
1630	86.96	…
1631	87.1	…
1632	86.99	…
1633	86.92	…
1634	87.1	…
1635	86.85	…

Time	*Vehicle speed*	*Road gradient*
s	*km/h*	*per cent*
1636	86.92	…
1637	86.77	…
1638	86.88	…
1639	86.63	…
1640	86.85	…
1641	86.63	…
1642	86.77	$-6.00E-06\times P^2 +5.11E-03\times P -0.41$
1643	86.77	$-5.09E-06\times P^2 +4.19E-03\times P +0.10$
1644	86.55	$-4.18E-06\times P^2 +3.26E-03\times P +0.61$
1645	86.59	…
1646	86.55	…
1647	86.7	…
1648	86.44	…
1649	86.7	…
1650	86.55	…
1651	86.33	…
1652	86.48	…
1653	86.19	…
1654	86.37	…
1655	86.59	…
1656	86.55	…
1657	86.7	…
1658	86.63	…
1659	86.55	…
1660	86.59	…
1661	86.55	…
1662	86.7	…
1663	86.55	…
1664	86.7	…
1665	86.52	…
1666	86.85	…
1667	86.55	…
1668	86.81	…
1669	86.74	…
1670	86.63	…
1671	86.77	…
1672	87.03	…
1673	87.07	…
1674	86.92	…
1675	87.07	…
1676	87.18	…
1677	87.32	…
1678	87.36	…
1679	87.29	…
1680	87.58	$-6.58E-06\times P^2 +5.65E-03\times P -0.51$
1681	87.61	$-8.97E-06\times P^2 +8.04E-03\times P -1.64$
1682	87.76	$-1.14E-05\times P^2 +1.04E-02\times P -2.77$

Time	*Vehicle speed*	*Road gradient*
s	*km/h*	*per cent*
1683	87.65	…
1684	87.61	…
1685	87.65	…
1686	87.65	…
1687	87.76	…
1688	87.76	…
1689	87.8	…
1690	87.72	…
1691	87.69	…
1692	87.54	…
1693	87.76	…
1694	87.5	…
1695	87.43	…
1696	87.47	…
1697	87.5	…
1698	87.5	…
1699	87.18	…
1700	87.36	…
1701	87.29	…
1702	87.18	…
1703	86.92	…
1704	87.36	…
1705	87.03	…
1706	87.07	…
1707	87.29	…
1708	86.99	…
1709	87.25	…
1710	87.14	…
1711	86.96	…
1712	87.14	…
1713	87.07	…
1714	86.92	…
1715	86.88	…
1716	86.85	…
1717	86.92	…
1718	86.81	…
1719	86.88	…
1720	86.66	…
1721	86.92	…
1722	86.48	…
1723	86.66	…
1724	86.74	$-1.01E-05\times P^2 +9.14E-03\times P -2.12$
1725	86.37	$-8.83E-06\times P^2 +7.85E-03\times P -1.47$
1726	86.48	$-7.56E-06\times P^2 +6.56E-03\times P -0.83$
1727	86.33	…
1728	86.3	…
1729	86.44	…

Time	*Vehicle speed*	*Road gradient*
s	*km/h*	*per cent*
1730	86.33	…
1731	86	…
1732	86.33	…
1733	86.22	…
1734	86.08	…
1735	86.22	…
1736	86.33	…
1737	86.33	…
1738	86.26	…
1739	86.48	…
1740	86.48	…
1741	86.55	…
1742	86.66	…
1743	86.66	…
1744	86.59	…
1745	86.55	…
1746	86.74	$-4.31E-06\times P^2 +3.96E-03\times P -0.51$
1747	86.21	$-1.06E-06\times P^2 +1.35E-03\times P -0.19$
1748	85.96	$+2.19E-06\times P^2 -1.26E-03\times P +0.13$
1749	85.5	…
1750	84.77	…
1751	84.65	…
1752	84.1	…
1753	83.46	…
1754	82.77	…
1755	81.78	…
1756	81.16	…
1757	80.42	…
1758	79.21	…
1759	78.48	…
1760	77.49	…
1761	76.69	…
1762	75.92	…
1763	75.08	…
1764	73.87	…
1765	72.15	…
1766	69.69	…
1767	67.17	…
1768	64.75	…
1769	62.55	…
1770	60.32	…
1771	58.45	…
1772	56.43	…
1773	54.35	…
1774	52.22	…
1775	50.25	…
1776	48.23	…

Time	*Vehicle speed*	*Road gradient*
s	*km/h*	*per cent*
1777	46.51	…
1778	44.35	…
1779	41.97	…
1780	39.33	…
1781	36.48	…
1782	33.8	…
1783	31.09	…
1784	28.24	…
1785	26.81	…
1786	23.33	…
1787	19.01	…
1788	15.05	…
1789	12.09	…
1790	9.49	…
1791	6.81	…
1792	4.28	…
1793	2.09	…
1794	0.88	…
1795	0.88	…
1796	0	…
1797	0	…
1798	0	…
1799	0	…
1800	0	…

Annex 2

Reference fuels

A.2.1. European diesel reference fuel

Parameter	*Unit*	*Limits*[1]		*Test method*[5]
		Minimum	*Maximum*	
Cetene number		52	54	ISO 5165
Density at 15 °C	kg/m^3	833	837	ISO 3675
Distillation:				
- 50 per cent vol.	°C	245		ISO 3405
- 95 per cent vol	°C	345	350	
- final boiling point	°C		370	
Flash point	°C	55		ISO 2719
Cold filter plugging point	°C		-5	EN 116
Kinematic viscosity at 40 °C	mm^2/s	2.3	3.3	ISO 3104
Polycylic aromatic hydrocarbons	per cent m/m	2.0	6.0	EN 12916
Conradson carbon residue (10 per cent DR)	per cent m/m		0.2	ISO 10370
Ash content	per cent m/m		0.01	EN-ISO 6245
Water content	per cent m/m		0.02	EN-ISO 12937
Sulfur content	mg/kg		10	EN-ISO 14596
Copper corrosion at 50 °C			1	EN-ISO 2160
Lubricity (HFRR at 60 °C)	µm		400	CEC F-06-A-96
Neutralisation number	mg KOH/g		0.02	
Oxidation stability @ 110 °C[2,3]	h	20		EN 14112
FAME[4]	per cent v/v	4.5	5.5	EN 14078

[1] The values quoted in the specification are "true values". In establishing their limit values, the terms of ISO 4259 "Petroleum products - Determination and application of precision data in relation to methods of test have been applied and in determining a minimum value, a minimum difference of 2R above zero has been taken into account. In determining a maximum and minimum value, the minimum difference has been set at 4R (R = reproducibility).

Notwithstanding this measure, which is necessary for statistical reasons, the manufacturer of fuels should nevertheless aim at a zero value where the stipulated maximum value is 2R and at the mean value in the case of quotations of maximum and minimum limits. Should it be necessary to clarify the question as to whether a fuel meets the requirements of the specifications, the terms of ISO 4259 should be applied.

[2] Even though oxidation stability is controlled, it is likely that shelf life will be limited. Advice shall be sought from the supplier as to storage conditions and life.

[3] Oxidation stability can be demonstrated by EN-ISO 12205 or by EN 14112. This requirement shall be revised based on CEN/TC19 evaluations of oxidative stability performance and test limits.

[4] FAME quality according EN 14214 (ASTM D 6751).

[5] The latest version of the respective test method applies.

A.2.2. United States of America diesel reference fuel 2-D

Parameter	*Unit*	*Test method*	*Limits*	
			min.	*max.*
Cetane number	1	ASTM D 613	40	50
Cetane index	1	ASTM D 976	40	50
Density at 15 °C	kg/m^3	ASTM D 1298	840	865
Distillation		ASTM D 86		
Initial boiling point	°C		171	204
10 per cent Vol.	°C		204	238
50 per cent Vol.	°C		243	282
90 per cent Vol.	°C		293	332
Final boiling point	°C		321	366
Flash point	°C	ASTM D 93	54	-
Kinematic viscosity at 37.9 °C	mm^2/s	ASTM D 445	2	3.2
Mass fraction of sulfur	ppm	ASTM D 2785	7	15
Volume fraction of aromatics	per cent v/v	ASTM D 1319	27	-

A.2.3. Japan diesel reference fuel

Property	*Unit*	*Test method*	*Grade 1*		*Grade 2*		*Cert. Diesel*	
			min.	*max.*	*min.*	*max.*	*min.*	*max.*
Cetane index		ISO 4264	50	-	45	-	53	57
Density @ 15°C	kg/m^3		-	-	-	-	824	840
Distillation		ISO 3405						
50 per cent Vol.	°C		-	-	-	-	255	295
90 per cent Vol.	°C		-	360	-	350	300	345
End point	°C		-	-	-	-	-	370
Flash point	°C	ISO 3405	50	-	50	-	58	-
Cold filter plugging point	°C	ICS 75.160.20	-	-1	-	-5	-	-
Pour point	°C	ISO 3015	-	-2.5	-	-7.5	-	-
Kinematic viscosity @ 30 °C	mm^2/s	ISO 2909	2.7	-	2.5	-	3.0	4.5
Mass fraction of sulfur	per cent	ISO 4260	-	0.001	-	0.001	-	0.001
Volume fraction of total aromatics	per cent v/v	HPLC	-	-	-	-	-	25
Volume fraction of poly-aromatics	per cent v/v	HPLC	-	-	-	-	-	5.0
Mass fraction of carbon residue (10 per cent bottom)	mg	ISO 4260	-	0.1	-	0.1	-	-

Annex 3

Measurement equipment

A.3.1. This annex contains the basic requirements and the general descriptions of the sampling and analyzing systems for gaseous and particulate emissions measurement. Since various configurations can produce equivalent results, exact conformance with the figures of this annex is not required. Components such as instruments, valves, solenoids, pumps, flow devices and switches may be used to provide additional information and coordinate the functions of the component systems. Other components, which are not needed to maintain the accuracy on some systems, may be excluded if their exclusion is based upon good engineering judgement.

A.3.1.1. Analytical system

A.3.1.2. Description of the analytical system

Analytical system for the determination of the gaseous emissions in the raw exhaust gas (Figure 9) or in the diluted exhaust gas (Figure 10) are described based on the use of:

(a) HFID or FID analyzer for the measurement of hydrocarbons;

(b) NDIR analyzers for the measurement of carbon monoxide and carbon dioxide;

(c) HCLD or CLD analyzer for the measurement of the oxides of nitrogen.

The sample for all components should be taken with one sampling probe and internally split to the different analyzers. Optionally, two sampling probes located in close proximity may be used. Care shall be taken that no unintended condensation of exhaust components (including water and sulphuric acid) occurs at any point of the analytical system.

Figure 9
Schematic flow diagram of raw exhaust gas analysis system for CO, CO_2, NO_x, HC

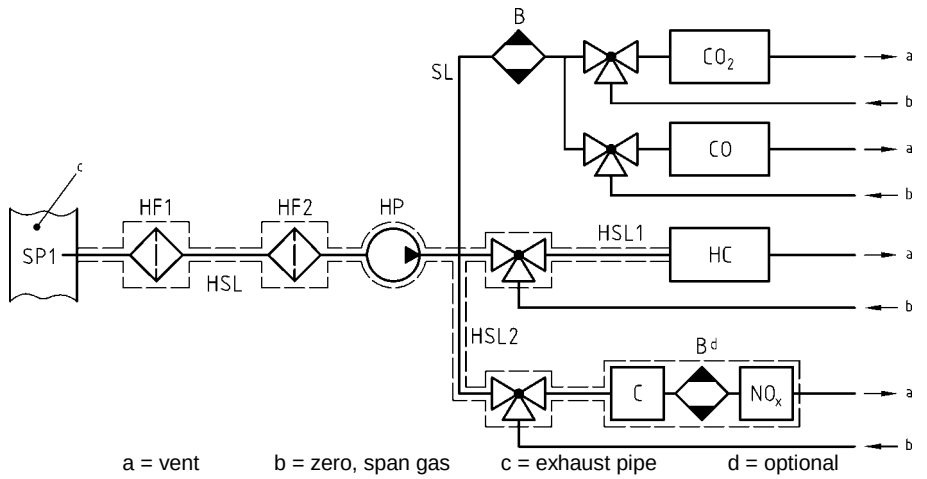

Figure 10
Schematic flow diagram of diluted exhaust gas analysis system for CO, CO_2, NO_x, HC

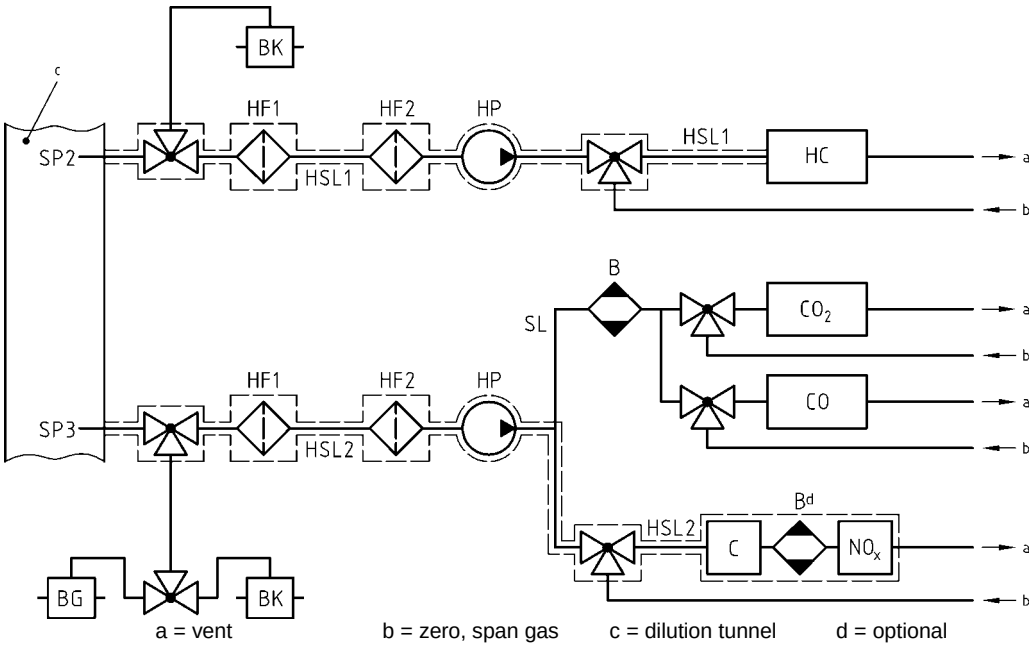

A.3.1.3. Components of Figures 9 and 10

EP Exhaust pipe

SP Raw exhaust gas sampling probe (Figure 9 only)

A stainless steel straight closed end multi-hole probe is recommended. The inside diameter shall not be greater than the inside diameter of the sampling line. The wall thickness of the probe shall not be greater than 1 mm. There shall be a minimum of 3 holes in 3 different radial planes sized to sample approximately the same flow. The probe shall extend across at least 80 per cent of the diameter of the exhaust pipe. One or two sampling probes may be used.

SP2 Dilute exhaust gas HC sampling probe (Figure 10 only)

The probe shall:

(a) Be defined as the first 254 mm to 762 mm of the heated sampling line HSL1

(b) Have a 5 mm minimum inside diameter

(c) Be installed in the Dilution Tunnel (DT) (Figure 15) at a point where the diluent and exhaust gas are well mixed (i.e. approximately 10 tunnel diameters downstream of the point where the exhaust enters the dilution tunnel)

(d) Be sufficiently distant (radially) from other probes and the tunnel wall so as to be free from the influence of any wakes or eddies

(e) Be heated so as to increase the gas stream temperature to 463 K ± 10 K (190 °C ± 10 °C) at the exit of the probe, or to 385 K ± 10 K (112 °C ± 10 °C) for positive ignition engines

(f) Non-heated in case of FID measurement (cold)

SP3 Dilute exhaust gas CO, CO_2, NO_x sampling probe (Figure 10 only)

The probe shall:

(a) Be in the same plane as SP2

(b) Be sufficiently distant (radially) from other probes and the tunnel wall so as to be free from the influence of any wakes or eddies

(c) Be heated and insulated over its entire length to a minimum temperature of 328 K (55 °C) to prevent water condensation

HF1 Heated pre-filter (optional)

The temperature shall be the same as HSL1.

HF2 Heated filter

The filter shall extract any solid particles from the gas sample prior to the analyzer. The temperature shall be the same as HSL1. The filter shall be changed as needed.

HSL1 Heated sampling line

The sampling line provides a gas sample from a single probe to the split point(s) and the HC analyzer.

The sampling line shall:

(a) Have a 4 mm minimum and a 13.5 mm maximum inside diameter

(b) Be made of stainless steel or PTFE

(c) Maintain a wall temperature of 463 K ± 10 K (190 °C ± 10 °C) as measured at every separately controlled heated section, if the temperature of the exhaust gas at the sampling probe is equal to or below 463 K (190 °C)

(d) Maintain a wall temperature greater than 453 K (180 °C), if the temperature of the exhaust gas at the sampling probe is above 463 K (190 °C)

(e) Maintain a gas temperature of 463 K ± 10 K (190 °C ± 10 °C) immediately before the heated filter HF2 and the HFID

HSL2 Heated NO_x sampling line

The sampling line shall:

(a) Maintain a wall temperature of 328 K to 473 K (55 °C to 200 °C), up to the converter for dry measurement, and up to the analyzer for wet measurement

(b) Be made of stainless steel or PTFE

HP Heated sampling pump

The pump shall be heated to the temperature of HSL.

SL Sampling line for CO and CO_2

The line shall be made of PTFE or stainless steel. It may be heated or unheated.

HC HFID analyzer

Heated Flame Ionization Detector (HFID) or Flame Ionization Detector (FID) for the determination of the hydrocarbons. The temperature of the HFID shall be kept at 453 K to 473 K (180 °C to 200 °C).

CO, CO_2 NDIR analyzer

NDIR analyzers for the determination of carbon monoxide and carbon dioxide (optional for the determination of the dilution ratio for PT measurement).

NO_x CLD analyzer or NDUV analyzer

CLD, HCLD or NDUV analyzer for the determination of the oxides of nitrogen. If a HCLD is used it shall be kept at a temperature of 328 K to 473 K (55 °C to 200 °C).

B Sample dryer (optional for NO measurement)

To cool and condense water from the exhaust sample. It is optional if the analyzer is free from water vapour interference as determined in paragraph 9.3.9.2.2. If water is removed by condensation, the sample gas temperature or dew point shall be monitored either within the water trap or downstream. The sample gas temperature or dew point shall not exceed 280 K (7 °C). Chemical dryers are not allowed for removing water from the sample.

BK Background bag (optional; Figure 10 only)

For the measurement of the background concentrations.

BG Sample bag (optional; Figure 10 only)

For the measurement of the sample concentrations.

A.3.1.4. Non-Methane Cutter method (NMC)

The cutter oxidizes all hydrocarbons except CH_4 to CO_2 and H_2O, so that by passing the sample through the NMC only CH_4 is detected by the HFID. In addition to the usual HC sampling train (see Figures 9 and 10), a second HC sampling train shall be installed equipped with a cutter as laid out in Figure 11. This allows simultaneous measurement of total HC, CH_4 and NMHC.

The cutter shall be characterized at or above 600 K (327 °C) prior to test work with respect to its catalytic effect on CH_4 and C_2H_6 at H_2O values representative of exhaust stream conditions. The dew point and O_2 level of the sampled exhaust stream shall be known. The relative response of the FID to CH_4 and C_2H_6 shall be determined in accordance with paragraph 9.3.8.

Figure 11
Schematic flow diagram of methane analysis with the NMC

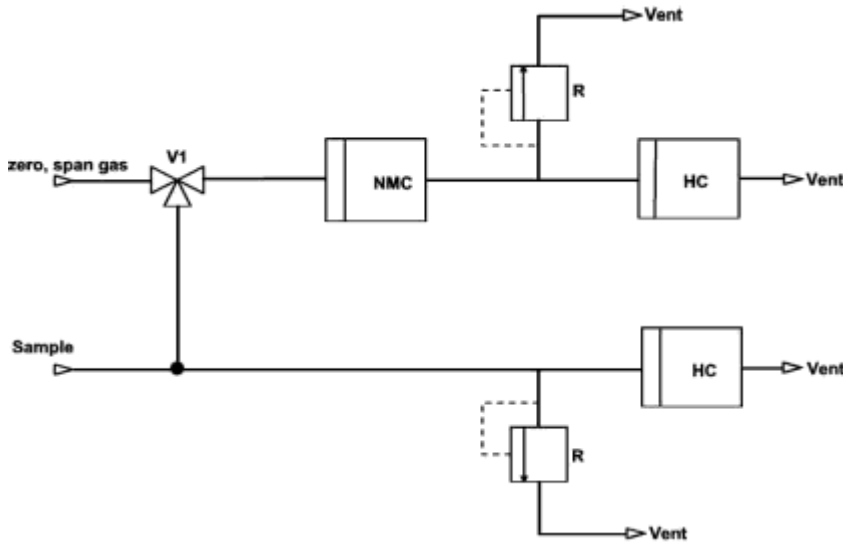

A.3.1.5. Components of Figure 11

NMC Non-methane cutter

To oxidize all hydrocarbons except methane

HC

Heated flame ionization detector (HFID) or flame ionization detector (FID) to measure the HC and CH_4 concentrations. The temperature of the HFID shall be kept at 453 K to 473 K (180 °C to 200 °C).

V1 Selector valve

To select zero and span gas

R Pressure regulator

To control the pressure in the sampling line and the flow to the HFID

A.3.2. Dilution and particulate sampling system

A.3.2.1. Description of partial flow system

A dilution system is described based upon the dilution of a part of the exhaust stream. Splitting of the exhaust stream and the following dilution process may be done by different dilution system types. For subsequent collection of the particulates, the entire dilute exhaust gas or only a portion of the dilute exhaust gas is passed to the particulate sampling system. The first method is referred to as total sampling type, the second method as fractional sampling type. The calculation of the dilution ratio depends upon the type of system used.

With the total sampling system as shown in Figure 12, raw exhaust gas is transferred from the Exhaust Pipe (EP) to the Dilution Tunnel (DT) through the Sampling Probe (SP) and the Transfer Tube (TT). The total flow through the tunnel is adjusted with the flow controller FC2 and the sampling pump (P) of the particulate sampling system (see Figure 16). The diluent flow is controlled by the flow controller FC1, which may use q_{mew} or q_{maw} and q_{mf} as command signals, for the desired exhaust split. The sample flow into DT is

the difference of the total flow and the diluent flow. The diluent flow rate is measured with the flow measurement device FM1, the total flow rate with the flow measurement device FM3 of the particulate sampling system (see Figure 6). The dilution ratio is calculated from these two flow rates.

Figure 12
Scheme of partial flow dilution system (total sampling type)

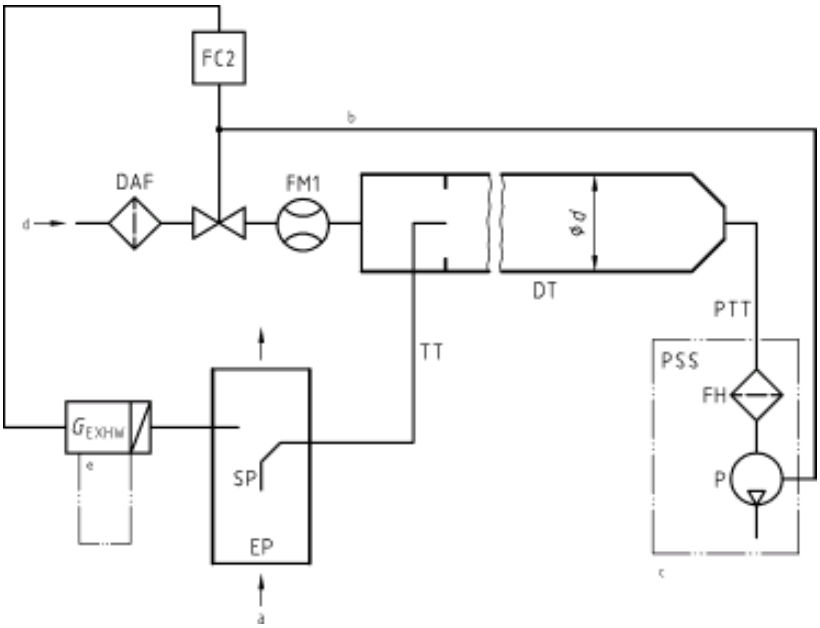

a = exhaust b = optional c = details see Figure 16

With the fractional sampling system as shown in Figure 13, raw exhaust gas is transferred from the Exhaust Pipe (EP) to the Dilution Tunnel (DT) through the Sampling Probe (SP) and the Transfer Tube (TT). The total flow through the tunnel is adjusted with the flow controller FC1 connected either to the diluent flow or to the suction blower for the total tunnel flow. The flow controller FC1 may use q_{mew} or q_{maw} and q_{mf} as command signals for the desired exhaust split. The sample flow into DT is the difference of the total flow and the diluent flow. The diluent flow rate is measured with the flow measurement device FM1, the total flow rate with the flow measurement device FM2. The dilution ratio is calculated from these two flow rates. From DT, a particulate sample is taken with the particulate sampling system (see Figure 16).

Figure 13
Scheme of partial flow dilution system (fractional sampling type)

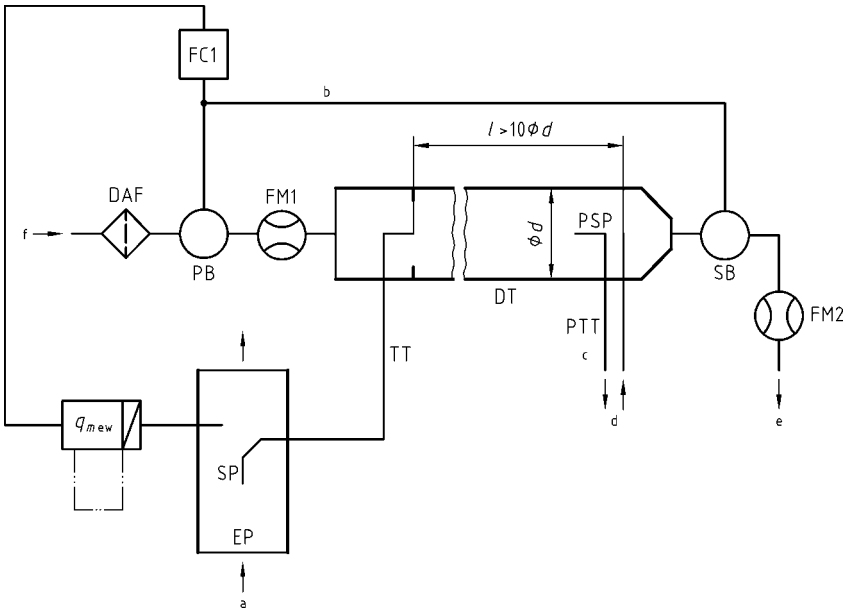

a = exhaust b = to PB or SB c = details see Figure 16 d = to particulate sampling system e = vent

A.3.2.2. Components of Figures 12 and 13

EP Exhaust pipe

The exhaust pipe may be insulated. To reduce the thermal inertia of the exhaust pipe a thickness to diameter ratio of 0.015 or less is recommended. The use of flexible sections shall be limited to a length to diameter ratio of 12 or less. Bends shall be minimized to reduce inertial deposition. If the system includes a test bed silencer the silencer may also be insulated. It is recommended to have a straight pipe of 6 pipe diameters upstream and 3 pipe diameters downstream of the tip of the probe.

SP Sampling probe

The type of probe shall be either of the following:

(a) Open tube facing upstream on the exhaust pipe centreline;

(b) Open tube facing downstream on the exhaust pipe centreline;

(c) Multiple hole probe as described under SP in paragraph A.3.1.3.;

(d) Hatted probe facing upstream on the exhaust pipe centreline as shown in Figure 14.

The minimum inside diameter of the probe tip shall be 4 mm. The minimum diameter ratio between exhaust pipe and probe shall be 4.

When using probe type (a), an inertial pre-classifier (cyclone or impactor) with at 50 per cent cut point between 2.5 and 10 µm shall be installed immediately upstream of the filter holder.

Figure 14
Scheme of hatted probe

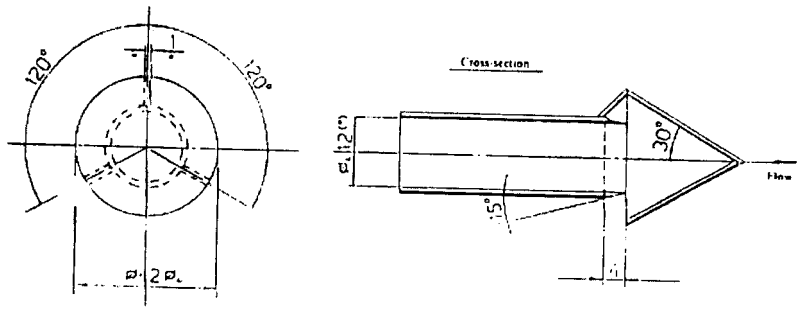

TT Exhaust transfer tube

The transfer tube shall be as short as possible, but:

(a) Not more than 0.26 m in length, if insulated for 80 per cent of the total length, as measured between the end of the probe and the dilution stage,

Or

(b) Not more than 1 m in length, if heated above 150 °C for 90 per cent of the total length, as measured between the end of the probe and the dilution stage.

It shall be equal to or greater than the probe diameter, but not more than 25 mm in diameter, and exiting on the centreline of the dilution tunnel and pointing downstream.

With respect to (a), insulation shall be done with material with a maximum thermal conductivity of 0.05 W/mK with a radial insulation thickness corresponding to the diameter of the probe.

FC1 Flow Controller

A flow controller shall be used to control the diluent flow through the Pressure Blower (PB) and/or the Suction Blower (SB). It may be connected to the exhaust flow sensor signals specified in paragraph 8.4.1. The flow controller may be installed upstream or downstream of the respective blower. When using a pressurized air supply, FC1 directly controls the airflow.

FM1 Flow measurement device

Gas meter or other flow instrumentation to measure the diluent flow. FM1 is optional if the Pressure Blower (PB) is calibrated to measure the flow.

DAF Diluent Air Filter

The diluent (ambient air, synthetic air, or nitrogen) shall be filtered with a high-efficiency (HEPA) filter that has an initial minimum collection efficiency of 99.97 per cent in accordance with EN 1822-1 (filter class H14 or better), ASTM F 1471-93 or equivalent standard.

FM2 Flow measurement device (fractional sampling type, Figure 13 only)

Gas meter or other flow instrumentation to measure the diluted exhaust gas flow. FM2 is optional if the suction blower SB is calibrated to measure the flow.

PB Pressure Blower (fractional sampling type, Figure 13 only)

To control the diluent flow rate, PB may be connected to the flow controllers FC1 or FC2. PB is not required when using a butterfly valve. PB may be used to measure the diluent flow, if calibrated.

SB Suction blower (fractional sampling type, Figure 13 only)

SB may be used to measure the diluted exhaust gas flow, if calibrated.

DT Dilution Tunnel (partial flow)

The dilution tunnel:

(a) Shall be of a sufficient length to cause complete mixing of the exhaust and diluent under turbulent flow conditions (Reynolds number, *Re*, greater than 4000, where *Re* is based on the inside diameter of the dilution tunnel) for a fractional sampling system, i.e. complete mixing is not required for a total sampling system;

(b) Shall be constructed of stainless steel;

(c) May be heated to no greater than 325 K (52 °C) wall temperature;

(d) May be insulated.

PSP Particulate Sampling Probe (fractional sampling type, Figure 13 only)

The particulate sampling probe is the leading section of the Particulate Transfer Tube (PTT) (see paragraph A.3.2.6.) and:

(a) Shall be installed facing upstream at a point where the diluent and exhaust gas are well mixed, i.e. on the Dilution Tunnel (DT) centreline approximately 10 tunnel diameters downstream of the point where the exhaust enters the dilution tunnel;

(b) Shall be 8 mm in minimum inside diameter;

(c) May be heated to no greater than 325 K (52 °C) wall temperature by direct heating or by diluent pre-heating, provided the diluent temperature does not exceed 325 K (52 °C) prior to the introduction of the exhaust into the dilution tunnel;

(d) May be insulated.

A.3.2.3. Description of full flow dilution system

A dilution system is described based upon the dilution of the total amount of raw exhaust gas in the dilution tunnel DT using the CVS (constant volume sampling) concept, and is shown in Figure 15.

The diluted exhaust gas flow rate shall be measured either with a Positive Displacement Pump (PDP), with a Critical Flow Venturi (CFV) or with a Subsonic Venturi (SSV). A Heat Exchanger (HE) or Electronic Flow Compensation (EFC) may be used for proportional particulate sampling and for flow determination. Since particulate mass determination is based on the total diluted exhaust gas flow, it is not necessary to calculate the dilution ratio.

For subsequent collection of the particulates, a sample of the dilute exhaust gas shall be passed to the double dilution particulate sampling system (see Figure 17). Although partly a dilution system, the double dilution system is described as a modification of a particulate sampling system, since it shares most of the parts with a typical particulate sampling system.

Figure 15
Scheme of full flow dilution system (CVS)

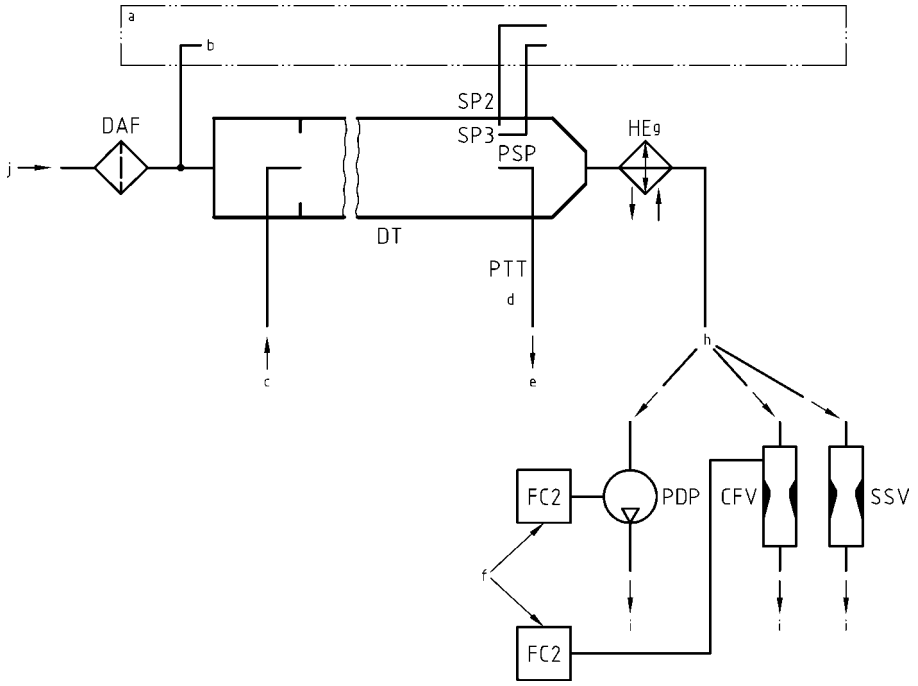

a = analyzer system b = background air c = exhaust d = details see Figure 17
e = to double dilution system f = if EFC is used i = vent g = optional h = or

A.3.2.4. Components of Figure 15

EP Exhaust pipe

The exhaust pipe length from the exit of the engine exhaust manifold, turbocharger outlet or after-treatment device to the dilution tunnel shall be not more than 10 m. If the system exceeds 4 m in length, then all tubing in excess of 4 m shall be insulated, except for an in-line smoke meter, if used. The radial thickness of the insulation shall be at least 25 mm. The thermal conductivity of the insulating material shall have a value no greater than 0.1 W/mK measured at 673 K. To reduce the thermal inertia of the exhaust pipe a thickness-to-diameter ratio of 0.015 or less is recommended. The use of flexible sections shall be limited to a length-to-diameter ratio of 12 or less.

PDP Positive displacement pump

The PDP meters total diluted exhaust flow from the number of the pump revolutions and the pump displacement. The exhaust system backpressure shall not be artificially lowered by the PDP or diluent inlet system. Static exhaust backpressure measured with the PDP system operating shall remain within ±1.5 kPa of the static pressure measured without connection to the PDP at identical engine speed and load. The gas mixture temperature immediately ahead of the PDP shall be within ±6 K of the average operating temperature observed during the test, when no flow compensation (EFC) is used. Flow compensation is only permitted, if the temperature at the inlet to the PDP does not exceed 323 K (50 °C).

CFV Critical flow venturi

CFV measures total diluted exhaust flow by maintaining the flow at chocked conditions (critical flow). Static exhaust backpressure measured with the CFV system operating shall remain within ±1.5 kPa of the static pressure measured without connection to the CFV at identical engine speed and load. The gas mixture temperature immediately ahead of the CFV shall be within ±11 K of the average operating temperature observed during the test, when no flow compensation (EFC) is used.

SSV Subsonic venturi

SSV measures total diluted exhaust flow by using the gas flow function of a subsonic venturi in dependence of inlet pressure and temperature and pressure drop between venturi inlet and throat. Static exhaust backpressure measured with the SSV system operating shall remain within ±1.5 kPa of the static pressure measured without connection to the SSV at identical engine speed and load. The gas mixture temperature immediately ahead of the SSV shall be within ±11 K of the average operating temperature observed during the test, when no flow compensation (EFC) is used.

HE Heat exchanger (optional)

The heat exchanger shall be of sufficient capacity to maintain the temperature within the limits required above. If EFC is used, the heat exchanger is not required.

EFC Electronic flow compensation (optional)

If the temperature at the inlet to the PDP, CFV or SSV is not kept within the limits stated above, a flow compensation system is required for continuous measurement of the flow rate and control of the proportional sampling into the double dilution system. For that purpose, the continuously measured flow rate signals are used to maintain the proportionality of the sample flow rate through the particulate filters of the double dilution system (see Figure 17) within ±2.5 per cent.

DT Dilution tunnel (full flow)

The dilution tunnel

(a) Shall be small enough in diameter to cause turbulent flow (Reynolds number, *Re*, greater than 4000, where *Re* is based on the inside diameter of the dilution tunnel) and of sufficient length to cause complete mixing of the exhaust and diluent;

(b) May be insulated;

(c) May be heated up to a wall temperature sufficient to eliminate aqueous condensation.

The engine exhaust shall be directed downstream at the point where it is introduced into the dilution tunnel, and thoroughly mixed. A mixing orifice may be used.

For the double dilution system, a sample from the dilution tunnel is transferred to the secondary dilution tunnel where it is further diluted, and then passed through the sampling filters (Figure 17). The secondary dilution system shall provide sufficient secondary diluent to maintain the doubly diluted exhaust stream at a temperature between 315 K (42 °C) and 325 K (52 °C) immediately before the particulate filter.

DAF Diluent Air Filter

The diluent (ambient air, synthetic air, or nitrogen) shall be filtered with a high-efficiency (HEPA) filter that has an initial minimum collection efficiency of 99.97 per cent in accordance with EN 1822-1 (filter class H14 or better), ASTM F 1471-93 or equivalent standard.

PSP Particulate sampling probe

The probe is the leading section of PTT and

(a) Shall be installed facing upstream at a point where the diluent and exhaust gases are well mixed, i.e. on the Dilution Tunnel (DT) centreline of the dilution systems, approximately 10 tunnel diameters downstream of the point where the exhaust enters the dilution tunnel;

(b) Shall be of 8 mm minimum inside diameter;

(c) May be heated to no greater than 325 K (52 °C) wall temperature by direct heating or by diluent pre-heating, provided the air temperature does not exceed 325 K (52 °C) prior to the introduction of the exhaust in the dilution tunnel;

(d) May be insulated.

A.3.2.5. Description of particulate sampling system

The particulate sampling system is required for collecting the particulates on the particulate filter and is shown in Figures 16 and 17. In the case of total sampling partial flow dilution, which consists of passing the entire diluted exhaust sample through the filters, the dilution and sampling systems usually form an integral unit (see Figure 12). In the case of fractional sampling partial flow dilution or full flow dilution, which consists of passing through the filters only a portion of the diluted exhaust, the dilution and sampling systems usually form different units.

For a partial flow dilution system, a sample of the diluted exhaust gas is taken from the Dilution Tunnel (DT) through the Particulate Sampling Probe (PSP) and the Particulate Transfer Tube (PTT) by means of the sampling pump P, as shown in Figure 16. The sample is passed through the Filter Holder(s) (FH) that contain the particulate sampling filters. The sample flow rate is controlled by the flow controller FC3.

For of full flow dilution system, a double dilution particulate sampling system shall be used, as shown in Figure 17. A sample of the diluted exhaust gas is transferred from the Dilution Tunnel (DT) through the Particulate Sampling Probe (PSP) and the Particulate Transfer Tube (PTT) to the Secondary Dilution Tunnel (SDT), where it is diluted once more. The sample is then passed through the Filter Holder(s) (FH) that contain the particulate sampling filters. The diluent flow rate is usually constant whereas the sample flow rate is controlled by the flow controller FC3. If Electronic Flow Compensation (EFC) (see Figure 15) is used, the total diluted exhaust gas flow is used as command signal for FC3.

Figure 16
Scheme of particulate sampling system

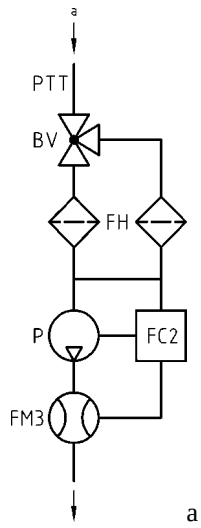

a = from dilution tunnel

Figure 17
Scheme of double dilution particulate sampling system

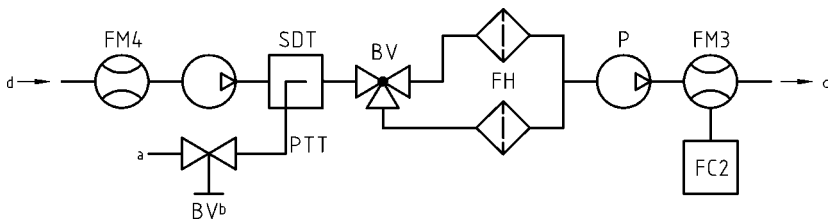

a = diluted exhaust from DT b = optional c = vent d = secondary diluent

A.3.2.6. Components of Figures 16 (partial flow system only) and 17 (full flow system only)

PTT Particulate transfer tube

The transfer tube:

(a) Shall be inert with respect to PM;

(b) May be heated to no greater than 325 K (52 °C) wall temperature;

(c) May be insulated;

SDT Secondary dilution tunnel (Figure 17 only)

The secondary dilution tunnel:

(a) Shall be of sufficient length and diameter so as to comply with the residence time requirements of paragraph 9.4.2., subparagraph (f);

(b) May be heated to no greater than 325 K (52 °C) wall temperature;

(c) May be insulated.

FH Filter holder

The filter holder:

(a) Shall have a 12.5° (from center) divergent cone angle to transition from the transfer line diameter to the exposed diameter of the filter face;

(b) May be heated to no greater than 325 K (52 °C) wall temperature;

(c) May be insulated.

Multiple filter changers (auto changers) are acceptable, as long as there is no interaction between sampling filters.

Polytretrafluoroethylene (PTFE) membrane filters shall be placed in a specific cassette within the filter holder.

An inertial pre-classifier with a 50 per cent cut point between 2.5 µm and 10 µm shall be installed immediately upstream of the filter holder, if an open tube sampling probe facing upstream is used.

P Sampling pump

FC2 Flow controller

A flow controller shall be used for controlling the particulate sample flow rate.

FM3 Flow measurement device

Gas meter or flow instrumentation to determine the particulate sample flow through the particulate filter. It may be installed upstream or downstream of the sampling pump P.

FM4 Flow measurement device

Gas meter or flow instrumentation to determine the secondary diluent flow through the particulate filter.

BV Ball valve (optional)

The ball valve shall have an inside diameter not less than the inside diameter of the Particulate Transfer Tube (PTT), and a switching time of less than 0.5 s.

Annex 4

Statistics

A.4.1. Mean value and standard deviation

The arithmetic mean value shall be calculated as follows:

$$\bar{x} = \frac{\sum_{i=1}^{n} x_i}{n} \tag{96}$$

The standard deviation shall be calculated as follows:

$$s = \sqrt{\frac{\sum_{i=1}^{n} \left(x_i - \bar{x}\right)^2}{n-1}} \tag{97}$$

A.4.2. Regression analysis

The slope of the regression shall be calculated as follows:

$$a_1 = \frac{\sum_{i=1}^{n} \left(y_i - \bar{y}\right) \times \left(x_i - \bar{x}\right)}{\sum_{i=1}^{n} \left(x_i - \bar{x}\right)^2} \tag{98}$$

The y intercept of the regression shall be calculated as follows:

$$a_0 = \bar{y} - \left(a_1 \times \bar{x}\right) \tag{99}$$

The Standard Error of Estimate (SEE) shall be calculated as follows:

$$SEE = \frac{\sqrt{\sum_{i=1}^{n} \left[y_i - a_0 - \left(a_1 \times x_i\right)\right]^2}}{n-2} \tag{100}$$

The coefficient of determination shall be calculated as follows:

$$r^2 = 1 - \frac{\sum_{i=1}^{n} \left[y_i - a_0 - \left(a_1 \times x_i\right)\right]^2}{\sum_{i=1}^{n} \left(y_i - \bar{y}\right)^2} \tag{101}$$

A.4.3. Determination of system equivalency

The determination of system equivalency in accordance with paragraph 5.1.1. shall be based on a 7 sample pair (or larger) correlation study between the candidate system and one of the accepted reference systems of this gtr using the appropriate test cycle(s). The equivalency criteria to be applied shall be the F-test and the two-sided Student t-test.

This statistical method examines the hypothesis that the sample standard deviation and sample mean value for an emission measured with the candidate system do not differ from the sample standard deviation and sample mean value for that emission measured with the reference system. The hypothesis shall be tested on the basis of a 10 per cent significance level of the *F* and *t* values. The critical *F* and *t* values for 7 to 10 sample pairs are given in Table 11. If the *F* and t values calculated in accordance with equations 102 and 103 below are greater than the critical *F* and *t* values, the candidate system is not equivalent.

The following procedure shall be followed. The subscripts R and C refer to the reference and candidate system, respectively:

(a) Conduct at least 7 tests with the candidate and reference systems operated in parallel. The number of tests is referred to as n_R and n_C.

(b) Calculate the mean values $\overline{x_R}$ and $\overline{x_C}$ and the standard deviations s_R and s_C.

(c) Calculate the *F* value, as follows:

$$F = \frac{s_{\text{major}}^2}{s_{\text{minor}}^2} \tag{102}$$

(The greater of the two standard deviations s_R or s_C shall be in the numerator)

(d) Calculate the *t* value, as follows:

$$t = \frac{\left|\overline{x_C} - \overline{x_R}\right|}{\sqrt{(n_C - 1)\times s_C^2 + (n_R - 1)\times s_R^2}} \times \sqrt{\frac{n_C \times n_R \times (n_C + n_R - 2)}{n_C + n_R}} \tag{103}$$

(e) Compare the calculated *F* and *t* values with the critical *F* and *t* values corresponding to the respective number of tests indicated in Table 9. If larger sample sizes are selected, consult statistical tables for 10 per cent significance (90 per cent confidence) level.

(f) Determine the degrees of freedom (*df*), as follows:

For the *F*-test: $df = n_R - 1 / n_C - 1$ (104)

For the *t*-test: $df = n_C + n_R - 2$ (105)

(g) Determine the equivalency, as follows:

(i) If $F < F_{crit}$ and $t < t_{crit}$, then the candidate system is equivalent to the reference system of this gtr;

(ii) If $F \geq F_{crit}$ or $t \geq t_{crit}$, then the candidate system is different from the reference system of this gtr.

Table 11
***t* and *F* values for selected sample sizes**

Sample Size	*F-test*		*t-test*	
	df	F_{crit}	*df*	t_{crit}
7	6/6	3.055	12	1.782
8	7/7	2.785	14	1.761
9	8/8	2.589	16	1.746
10	9/9	2.440	18	1.734

Annex 5

Carbon flow check

A.5.1. Introduction

All but a tiny part of the carbon in the exhaust comes from the fuel, and all but a minimal part of this is manifest in the exhaust gas as CO_2. This is the basis for a system verification check based on CO_2 measurements.

The flow of carbon into the exhaust measurement systems is determined from the fuel flow rate. The flow of carbon at various sampling points in the emissions and particulate sampling systems is determined from the CO_2 concentrations and gas flow rates at those points.

In this sense, the engine provides a known source of carbon flow, and observing the same carbon flow in the exhaust pipe and at the outlet of the partial flow PM sampling system verifies leak integrity and flow measurement accuracy. This check has the advantage that the components are operating under actual engine test conditions of temperature and flow.

Figure 18 shows the sampling points at which the carbon flows shall be checked. The specific equations for the carbon flows at each of the sample points are given below.

Figure 18
Measuring points for carbon flow check

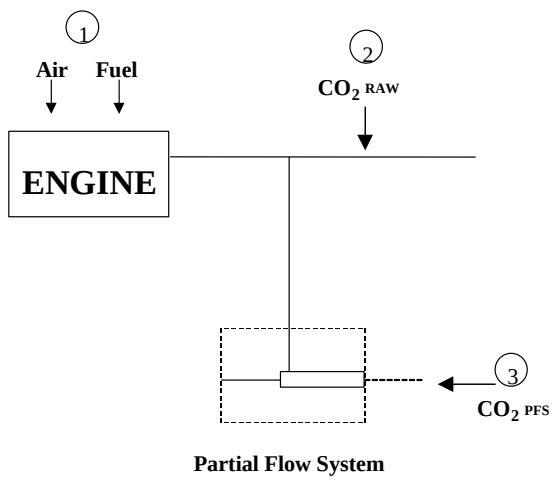

A.5.2. Carbon flow rate into the engine (location 1)

The carbon mass flow rate into the engine for a fuel $CH_\alpha O_\varepsilon$ is given by:

$$q_{mCf} = \frac{12\beta}{12\beta + \alpha + 16\varepsilon} \times q_{mf} \qquad (106)$$

Where:

q_{mf} is the fuel mass flow rate, kg/s

A.5.3. Carbon flow rate in the raw exhaust (location 2)

The carbon mass flow rate Q_{mCe} in the exhaust pipe of the engine shall be determined from the raw CO_2 concentration and the exhaust gas mass flow rate:

$$q_{mCe} = \left(\frac{c_{CO2,r} - c_{CO2,a}}{100} \right) \times q_{mew} \times \frac{12.011}{M_{re}} \qquad (107)$$

Where:

$c_{CO2,r}$ is the wet CO_2 concentration in the raw exhaust gas, per cent

$c_{CO2,a}$ is the wet CO_2 concentration in the ambient air, per cent

q_{mew} is the exhaust gas mass flow rate on wet basis, kg/s

M_e is the molar mass of exhaust gas, g/mol

If CO_2 is measured on a dry basis it shall be converted to a wet basis in accordance with paragraph 8.1.

A.5.4. Carbon flow rate in the dilution system (location 3)

For the partial flow dilution system, the splitting ratio also needs to be taken into account. The carbon flow rate Q_{mCp} shall be determined from the dilute CO_2 concentration, the exhaust gas mass flow rate and the sample flow rate:

$$q_{mCp} = \left(\frac{c_{CO2,d} - c_{CO2,a}}{100} \right) \times q_{mdew} \times \frac{12.011}{M_e} \times \frac{q_{mew}}{q_{mp}} \qquad (108)$$

Where:

$c_{CO2,d}$ is the wet CO_2 concentration in the dilute exhaust gas at the outlet of the dilution tunnel, per cent

$c_{CO2,a}$ is the wet CO_2 concentration in the ambient air, per cent

q_{mew} is the exhaust gas mass flow rate on wet basis, kg/s

q_{mp} is the sample flow of exhaust gas into partial flow dilution system, kg/s

M_e is the molar mass of exhaust gas, g/mol

If CO_2 is measured on a dry basis, it shall be converted to wet basis in accordance with paragraph 8.1.

A.5.5. Calculation of the molar mass of the exhaust gas

The molar mass of the exhaust gas shall be calculated in accordance with equation 41 (see paragraph 8.4.2.4.)

Alternatively, the following exhaust gas molar masses may be used:

M_e (diesel) = 28.9 g/mol

M_e (LPG) = 28.6 g/mol

M_e (NG) = 28.3 g/mol

Annex 6

Example of calculation procedure

A.6.1. Speed and torque denormalization procedure

As an example, the following test point shall be denormalized:

Per cent speed = 43 per cent

Per cent torque = 82 per cent

Given the following values:

n_{lo} = 1,015 min^{-1}

n_{hi} = 2,200 min^{-1}

n_{pref} = 1,300 min^{-1}

n_{idle} = 600 min^{-1}

Results in:

Equation 250:

$$\text{Actual speed} = \frac{43 \times (0.45 \times 1{,}015 + 0.45 \times 1{,}300 + 0.1 \times 2{,}200 - 600) \times 2.0327}{100} + 600 = 1{,}178 \text{ min}^{-1}$$

With the maximum torque of 700 Nm observed from the mapping curve at 1,178 min^{-1}

$$\text{Actual torque} = \frac{82 \times 700}{100} = 574 \text{ Nm}$$

A.6.2. Basic data for stoichiometric calculations

Atomic mass of hydrogen	1.00794 g/mol
Atomic mass of carbon	12.011 g/mol
Atomic mass of sulphur	32.065 g/mol
Atomic mass of nitrogen	14.0067 g/mol
Atomic mass of oxygen	15.9994 g/mol
Atomic mass of argon	39.9 g/mol
Molar mass of water	18.01534 g/mol
Molar mass of carbon dioxide	44.01 g/mol
Molar mass of carbon monoxide	28.011 g/mol
Molar mass of oxygen	31.9988 g/mol
Molar mass of nitrogen	28.011 g/mol
Molar mass of nitric oxide	30.008 g/mol
Molar mass of nitrogen dioxide	46.01 g/mol
Molar mass of sulphur dioxide	64.066 g/mol

Molar mass of dry air 28.965 g/mol

Assuming no compressibility effects, all gases involved in the engine intake/combustion/exhaust process can be considered to be ideal and any volumetric calculations shall therefore be based on a molar volume of 22.414 l/mol in accordance with Avogadro's hypothesis.

A.6.3. Gaseous emissions (diesel fuel)

The measurement data of an individual point of the test cycle (data sampling rate of 1 Hz) for the calculation of the instantaneous mass emission are shown below. In this example, CO and NO_x are measured on a dry basis, HC on a wet basis. The HC concentration is given in propane equivalent (C3) and has to be multiplied by 3 to result in the C1 equivalent. The calculation procedure is identical for the other points of the cycle.

The calculation example shows the rounded intermediate results of the different steps for better illustration. It should be noted that for actual calculation, rounding of intermediate results is not permitted (see paragraph 8.).

$T_{a,i}$ (K)	$H_{a,i}$ (g/kg)	W_{act} kWh	$q_{mew,i}$ (kg/s)	$q_{maw,i}$ (kg/s)	$q_{mf,i}$ (kg/s)	$c_{HC,i}$ (ppm)	$c_{CO,i}$ (ppm)	$c_{NOx,i}$ (ppm)
295	8.0	40	0.155	0.150	0.005	10	40	500

The following fuel composition is considered:

Component	*Molar ratio*	*per cent mass*
H	$\alpha = 1.8529$	$w_{ALF} = 13.45$
C	$\beta = 1.0000$	$w_{BET} = 86.50$
S	$\gamma = 0.0002$	$w_{GAM} = 0.050$
N	$\delta = 0.0000$	$w_{DEL} = 0.000$
O	$\varepsilon = 0.0000$	$w_{EPS} = 0.000$

Step 1: Dry/wet correction (paragraph 8.1.):

Equation 18: k_{fw} = 0.055584 x 13.45 - 0.0001083 x 86.5 - 0.0001562 x 0.05
= 0.7382

Equation 15: $k_{w,a}$ $$= \left(1 - \frac{1.2434 \times 8 + 111.12 \times 13.45 \times \frac{0.005}{0.148}}{773.4 + 1.2434 \times 8 + \frac{0.005}{0.148} \times 0.7382 \times 1{,}000}\right) \times 1.008$$
= 0.9331

Equation 14: $c_{CO,i}$ (wet) = 40 x 0.9331 = 37.3 ppm

$c_{NOx,i}$ (wet) = 500 x 0.9331 = 466.6 ppm

Step 2: NO_x correction for temperature and humidity (paragraph 8.2.1.):

Equation 25: $$k_{h,D} = \frac{15.698 \times 8.00}{1{,}000} + 0.832 = 0.9576$$

Step 3: Calculation of the instantaneous emission of each individual point of the cycle (paragraph 8.4.2.3.):

Equation 251: $m_{HC,i}$ = 10 x 3 x 0.155 = 4.650

$m_{CO,i}$ = 37.3 x 0.155 = 5.782

$m_{NOx,i}$ = 466.6 x 0.9576 x 0.155 = 69.26

Step 4: Calculation of the mass emission over the cycle by integration of the instantaneous emission values and the *u* values from Table 5 (paragraph 8.4.2.3.):

The following calculation is assumed for the WHTC cycle (1,800 s) and the same emission in each point of the cycle.

Equation 38: $m_{HC} = 0.000479 \times \sum_{i=1}^{1800} 4.650 = 4.01$ g/test

$m_{CO} = 0.000966 \times \sum_{i=1}^{1800} 5.782 = 10.05$ g/test

$m_{NOx} = 0.001586 \times \sum_{i=1}^{1800} 69.26 = 197.72$ g/test

Step 5: Calculation of the specific emissions (paragraph 8.6.3.):

Equation 73: e_{HC} = 4.01 / 40 = 0.10 g/kWh

e_{CO} = 10.05 / 40 = 0.25 g/kWh

e_{NOx} = 197.72 / 40 = 4.94 g/kWh

A.6.4. Particulate emission (diesel fuel)

p_b (kPa)	W_{act} (kWh)	$q_{mew,i}$ (kg/s)	$q_{mf,i}$ (kg/s)	$q_{mdw,i}$ (kg/s)	$q_{mdew,i}$ (kg/s)	m_{uncor} (mg)	m_{sep} (kg)
99	40	0.155	0.005	0.0015	0.0020	1.7000	1.515

Step 1: Calculation of m_{edf} (paragraph 8.4.3.5.2.):

Equation 50: $r_{d,i} = \frac{0.002}{(0.002 - 0.0015)} = 4$

Equation 49: $q_{medf,i}$ = 0.155 x 4 = 0.620 kg/s

Equation 48: $m_{edf} = \sum_{i=1}^{1800} 0.620 = 1{,}116$ kg/test

Step 2: Buoyancy correction of the particulate mass (paragraph 8.3.)

Equation 28: $\rho_a = \frac{99 \times 28.836}{8.3144 \times 295} = 1.164$ kg/m^3

Equation 27: $m_f = 1.7000 \times \frac{(1 - 1.164/8{,}000)}{(1 - 1.164/2{,}300)} = 1.7006$ mg

Step 3: Calculation of the particulate mass emission (paragraph 8.4.3.5.2.):

Equation 47: $m_{PM} = \frac{1.7006}{1.515} \times \frac{1{,}116}{1{,}000} = 1.253$ g/test

Step 4: Calculation of the specific emission (paragraph 8.6.3.):

Equation 73: e_{PM} = 1.253 / 40 = 0.031 g/kWh

Annex 7

Installation of auxiliaries and equipment for emissions test

Number	*Auxiliaries*	*Fitted for emission test*
1	Inlet system	
	Inlet manifold	Yes
	Crankcase emission control system	Yes
	Control devices for dual induction inlet manifold system	Yes
	Air flow meter	Yes
	Air inlet duct work	Yes, or test cell equipment
	Air filter	Yes, or test cell equipment
	Inlet silencer	Yes, or test cell equipment
	Speed-limiting device	Yes
2	Induction-heating device of inlet manifold	Yes, if possible to be set in the most favourable condition
3	Exhaust system	
	Exhaust manifold	Yes
	Connecting pipes	Yes
	Silencer	Yes
	Tail pipe	Yes
	Exhaust brake	No, or fully open
	Pressure charging device	Yes
4	Fuel supply pump	Yes
5	Equipment for gas engines	
	Electronic control system, air flow meter, etc.	Yes
	Pressure reducer	Yes
	Evaporator	Yes
	Mixer	Yes
6	Fuel injection equipment	
	Prefilter	Yes
	Filter	Yes
	Pump	Yes
	High-pressure pipe	Yes
	Injector	Yes
	Air inlet valve	Yes
	Electronic control system, sensors, etc.	Yes
	Governor/control system	Yes

Number	*Auxiliaries*	*Fitted for emission test*
	Automatic full-load stop for the control rack depending on atmospheric conditions	Yes
7	Liquid-cooling equipment	
	Radiator	No
	Fan	No
	Fan cowl	No
	Water pump	Yes
	Thermostat	Yes, may be fixed fully open
8	Air cooling	
	Cowl	No
	Fan or Blower	No
	Temperature-regulating device	No
9	Electrical equipment	
	Alternator	No
	Coil or coils	Yes
	Wiring	Yes
	Electronic control system	Yes
10	Intake air charging equipment	
	Compressor driven either directly by the engine and/or by the exhaust gases	Yes
	Charge air cooler	Yes, or test cell system
	Coolant pump or fan (engine-driven)	No
	Coolant flow control device	Yes
11	Anti-pollution device (exhaust after-treatment system)	Yes
12	Starting equipment	Yes, or test cell system
13	Lubricating oil pump	Yes

Annex 8

Reserved

Annex 9

Test procedure for engines installed in hybrid vehicles using the HILS method

A.9.1. This annex contains the requirements and general description for testing engines installed in hybrid vehicles using the HILS method.

A.9.2. Test procedure

A.9.2.1 HILS method

The HILS method shall follow the general guidelines for execution of the defined process steps as outlined below and shown in the flow chart of Figure 19. The details of each step are described in the relevant paragraphs. Deviations from the guidance are permitted where appropriate, but the specific requirements shall be mandatory.

For the HILS method, the procedure shall follow:

(a) Selection and confirmation of the HDH object for approval

(b) Build of the HILS system setup

(c) Check of the HILS system performance

(d) Build and verification of the HV model

(e) Component test procedures

(f) Hybrid system rated power determination

(g) Creation of the hybrid engine cycle

(h) Exhaust emission test

(i) Data collection and evaluation

(j) Calculation of the specific emissions

Figure 19
HILS method flow chart

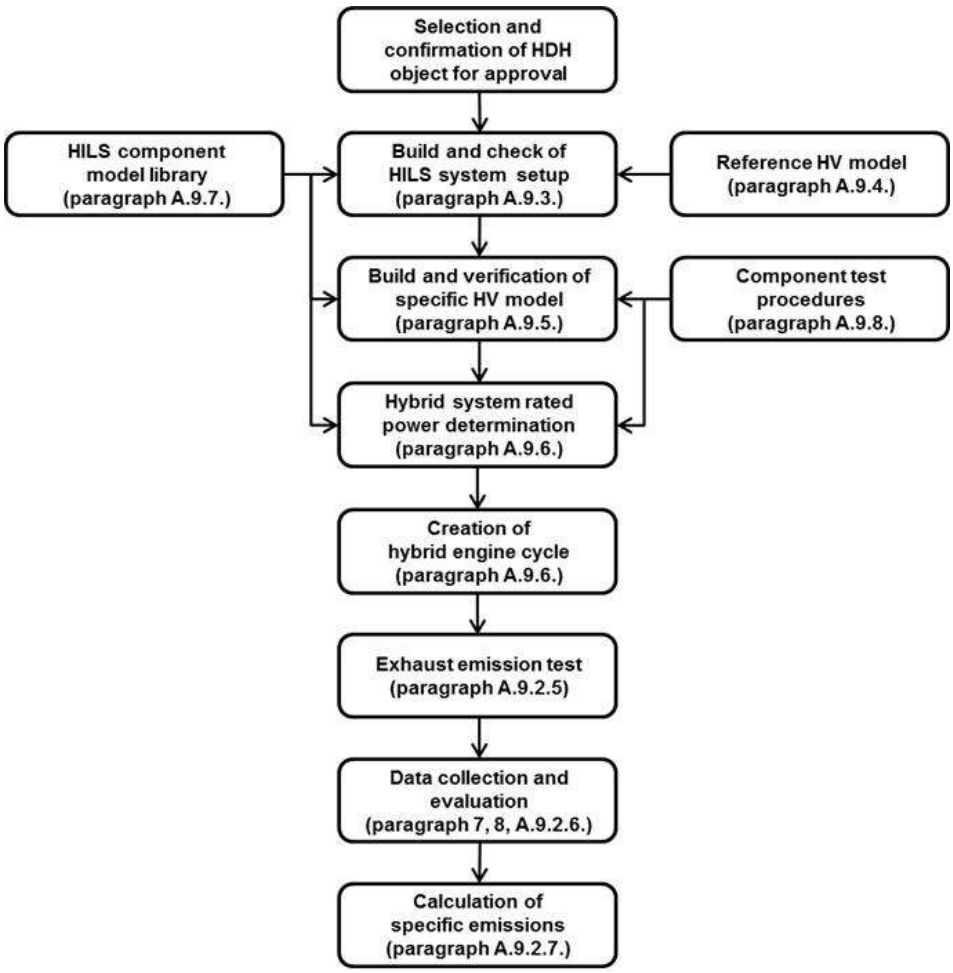

A.9.2.2. Build and verification of the HILS system setup

The HILS system setup shall be constructed and verified in accordance with the provisions of paragraph A.9.3.

A.9.2.3. Build and verification of HV model

The reference HV model shall be replaced by the specific HV model for approval representing the specified HD hybrid vehicle/powertrain and after enabling all other HILS system parts, the HILS system shall meet the provisions of paragraph A.9.5. to give the confirmed representative HD hybrid vehicle operation conditions.

A.9.2.4. Creation of the Hybrid Engine Cycle (HEC)

As part of the procedure for creation of the hybrid engine test cycle, the hybrid system power shall be determined in accordance with the provisions of paragraph A.9.6.3. or A.10.4. to obtain the hybrid system rated power. The HEC test shall be the result of the HILS simulated running procedure in accordance with the provisions of paragraph A.9.6.4.

A.9.2.5. Exhaust emission test

The exhaust emission test shall be conducted in accordance with paragraphs 6. and 7.

A.9.2.6. Data collection and evaluation

A.9.2.6.1. Emission relevant data

All data relevant for the pollutant emissions shall be recorded in accordance with paragraphs 7.6.6. during the engine emission test run.

If the predicted temperature method in accordance with paragraph A.9.6.2.18. is used, the temperatures of the elements that influence the hybrid control shall be recorded.

A.9.2.6.2. Calculation of hybrid system work

The hybrid system work shall be determined over the test cycle by synchronously using the hybrid system rotational speed and torque values at the wheel hub (HILS chassis model output signals in accordance with paragraph A.9.7.3.) from the valid HILS simulated run of paragraph A.9.6.4. to calculate instantaneous values of hybrid system power. Instantaneous power values shall be integrated over the test cycle to calculate the hybrid system work from the HILS simulated running W_{sys_HILS} (kWh). Integration shall be carried out using a frequency of 5 Hz or higher (10 Hz recommended) and include only positive power values in accordance with paragraph A.9.7.3. (equation 146).

The hybrid system work (W_{sys}) shall be calculated as follows:

(a) Cases where $W_{act} < W_{ice_HILS}$:

$$W_{sys} = W_{sys_HILS} \times \frac{W_{act}}{W_{ice_HILS}} \times \left(\frac{1}{0.95}\right)^2 \quad (109)$$

(b) Cases where $W_{act} \geq W_{ice_HILS}$

$$W_{sys} = W_{sys_HILS} \times \left(\frac{1}{0.95}\right)^2 \quad (110)$$

Where:

W_{sys} is the hybrid system work, kWh

W_{sys_HILS} is the hybrid system work from the final HILS simulated run, kWh

W_{act} is the actual engine work in the HEC test, kWh

W_{ice_HILS} is the engine work from the final HILS simulated run, kWh

All parameters shall be reported.

A.9.2.6.3. Validation of predicted temperature profile

In case the predicted temperature profile method in accordance with paragraph A.9.6.2.18. is used, it shall be proven, for each individual temperature of the elements that affect the hybrid control, that this temperature used in the HILS run is equivalent to the temperature of that element in the actual HEC test.

The method of least squares shall be used, with the best-fit equation having the form:

$$y = a_1 x + a_0 \quad (111)$$

Where:

y is the predicted value of the element temperature, °C

a_1 is the slope of the regression line

x is the measured reference value of the element temperature, °C

a_0 is the y-intercept of the regression line

The Standard Error of Estimate (SEE) of y on x and the coefficient of determination (r^2) shall be calculated for each regression line.

This analysis shall be performed at 1 Hz or greater. For the regression to be considered valid, the criteria of Table 12 shall be met.

Table 12
Tolerances for temperature profiles

	Element temperature
Standard Error of Estimate (SEE) of y on x	maximum 5 per cent of maximum measured element temperature
Slope of the regression line, a_1	0.95 to 1.03
Coefficient of determination, r^2	minimum 0.970
y-intercept of the regression line, a_0	maximum 10 per cent of minimum measured element temperature

A.9.2.7. Calculation of the specific emissions for hybrids

The specific emissions e_{gas} or e_{PM} (g/kWh) shall be calculated for each individual component as follows:

$$e = \frac{m}{W_{sys}} \quad (112)$$

Where:

e is the specific emission, g/kWh

m is the mass emission of the component, g/test

W_{sys} is the cycle work as determined in accordance with paragraph A.9.2.6.2., kWh

The final test result shall be a weighted average from cold start test and hot start test in accordance with the following equation:

$$e = \frac{(0.14 \times m_{cold}) + (0.86 \times m_{hot})}{(0.14 \times W_{sys,cold}) + (0.86 \times W_{sys,hot})} \quad (113)$$

Where:

m_{cold} is the mass emission of the component on the cold start test, g/test

m_{hot} is the mass emission of the component on the hot start test, g/test

$W_{sys,cold}$ is the hybrid system cycle work on the cold start test, kWh

$W_{sys,hot}$ is the hybrid system cycle work on the hot start test, kWh

If periodic regeneration in accordance with paragraph 6.6.2. applies, the regeneration adjustment factors $k_{r,u}$ or $k_{r,d}$ shall be multiplied with or be added to, respectively, the specific emission result e as determined in equations 112 and 113.

A.9.3. Build and verification of HILS system setup

A.9.3.1. General introduction

The build and verification of the HILS system setup procedure is outlined in Figure 20 below and provides guidelines on the various steps that shall be executed as part of the HILS procedure.

Figure 20
HILS system build and verification diagram

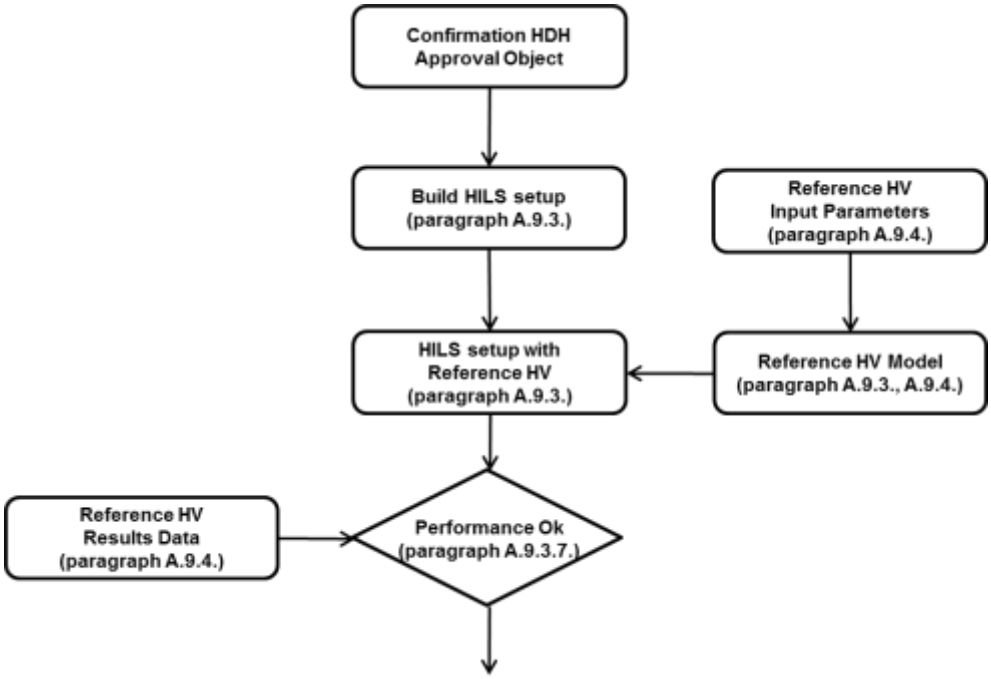

The HILS system shall consist of, as shown in Figure 21, all required HILS hardware, a HV model and its input parameters, a driver model and the test cycle as defined in Annex 1, paragraph (b), as well as the hybrid ECU(s) of the test motor vehicle (hereinafter referred to as the "actual ECU") and its power supply and required interface(s). The HILS system setup shall be defined in accordance with paragraph A.9.3.2. through A.9.3.6. and considered valid when meeting the criteria of paragraph A.9.3.7. The reference HV model (in accordance with paragraph A.9.4.) and HILS component library (in accordance with paragraph A.9.7.) shall be applied in this process.

Figure 21
Outline of HILS system setup

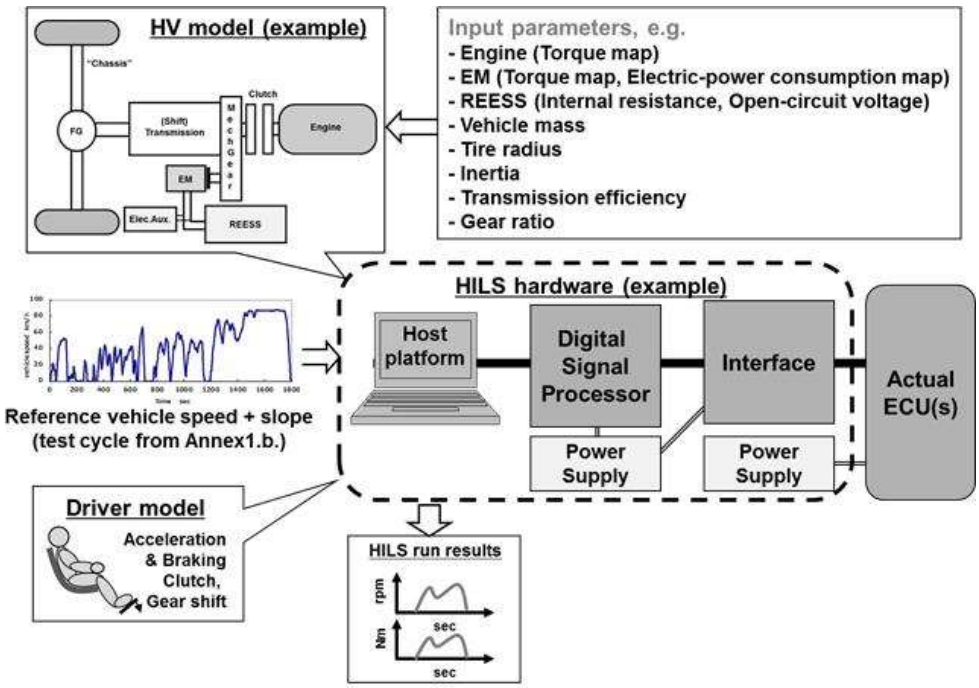

A.9.3.2. HILS hardware

The HILS hardware shall contain all physical systems to build up the HILS system, but excludes the actual ECU(s).

The HILS hardware shall have the signal types and number of channels that are required for constructing the interface between the HILS hardware and the actual ECU(s), and shall be checked and calibrated in accordance with the procedures of paragraph A.9.3.7. and using the reference HV model of paragraph A.9.4.

A.9.3.3. HILS software interface

The HILS software interface shall be specified and set up in accordance with the requirements for the (hybrid) vehicle model as specified in paragraph A.9.3.5. and required for the operation of the HV model and actual ECU(s). It shall be the functional connection between the HV model and driver model to the HILS hardware. In addition, specific signals can be defined in the interface model to allow correct functional operation of the actual ECU(s), e.g. ABS signals.

The interface shall not contain key hybrid control functionalities as specified in paragraph A.9.3.4.1.

A.9.3.4. Actual ECU(s)

The hybrid system ECU(s) shall be used for the HILS system setup. In case the functionalities of the hybrid system are performed by multiple controllers, those controllers may be integrated via interface or software emulation. However, the key hybrid functionalities shall be included in and executed by the hardware controller(s) as part of the HILS system setup.

A.9.3.4.1. Key hybrid functionalities

The key hybrid functionality shall contain at least the energy management and power distribution between the hybrid powertrain energy converters and the RESS.

A.9.3.5. Vehicle model

A vehicle model shall represent all relevant physical characteristics of the (heavy-duty) hybrid vehicle/powertrain to be used for the HILS system. The HV model shall be constructed by defining its components in accordance with paragraph A.9.7.

Two HV models are required for the HILS method and shall be constructed as follows:

(a) A reference HV model in accordance with its definition in paragraph A.9.4. shall be used for a SILS run using the HILS system to confirm the HILS system performance.

(b) A specific HV model defined in accordance with paragraph A.9.5. shall qualify as the valid representation of the specified heavy-duty hybrid powertrain. It shall be used for determination of the hybrid engine test cycle in accordance with paragraph A.9.6. as part of this HILS procedure.

A.9.3.6. Driver model

The driver model shall contain all required tasks to drive the HV model over the test cycle and typically includes e.g. accelerator and brake pedal signals as well as clutch and selected gear position in case of a manual shift transmission.

The driver model tasks may be implemented as a closed-loop controller or lookup tables as function of test time.

A.9.3.7. Operation check of HILS system setup

The operation check of the HILS system setup shall be verified through a SILS run using the reference HV model (in accordance with paragraph A.9.4.) on the HILS system.

Linear regression of the calculated output values of the reference HV model SILS run on the provided reference values (in accordance with paragraph A.9.4.4.) shall be performed. The method of least squares shall be used, with the best-fit equation having the form:

$$y = a_1 x + a_0 \quad (114)$$

Where:

y is the actual HILS value of the signal

x is the measured reference value of the signal

a_1 is the slope of the regression line

a_0 is the y-intercept value of the regression line

For the HILS system setup to be considered valid, the criteria of Table 13 shall be met.

In case the programming language for the HV model is other than Matlab®/Simulink®, the confirmation of the calculation performance for the

HILS system setup shall be proven using the specific HV model verification in accordance with paragraph A.9.5.

Table 13
Tolerances for HILS system setup operation check

Verification items	*Criteria*		
	slope, a_1	*y-intercept,* a_0	*coefficient of determination,* r^2
Vehicle speed	0.9995 to 1.0005	±0.05 per cent or less of the maximum value	minimum 0.995
ICE speed			
ICE torque			
EM speed			
EM torque			
REESS voltage			
REESS current			
REESS SOC			

A.9.4. Reference hybrid vehicle model

A.9.4.1. General introduction

The purpose of the reference HV model shall be the use in confirmation of the calculation performance (e.g. accuracy, frequency) of the HILS system setup (in accordance with paragraph A.9.3.) by using a predefined hybrid topology and control functionality for verifying the corresponding HILS calculated data against the expected reference values.

A.9.4.2. Reference HV model description

The reference HV model has a parallel hybrid powertrain topology consisting of following components, as shown in Figure 22, and includes its control strategy:

(a) Internal combustion engine

(b) Clutch

(c) Battery

(d) Electric motor

(e) Mechanical gearing (for connection of EM between clutch and transmission)

(f) Shift transmission

(g) Final gear

(h) Chassis, including wheels and body

The reference HV model is available as part of the HILS library available at http://www.unece.org/trans/main/wp29/wp29wgs/wp29gen/wp29glob_registry.html at the gtr No. 4 Addendum.

The reference HV model is named "reference_hybrid_vehicle_model.mdl" and its parameter files as well as the SILS run output data are available at the following directory in the HILS library: "<root>\HILS_GTR\Vehicles\ReferenceHybridVehicleModel" (and all of its subdirectories).

Figure 22
Reference HV model powertrain topology

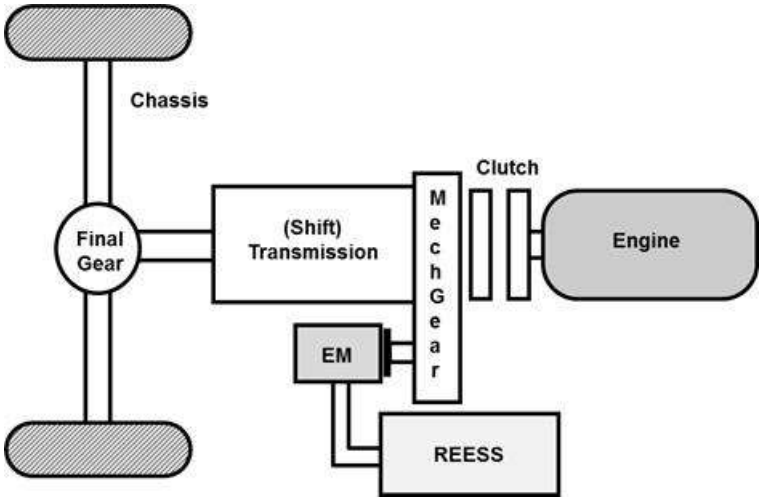

A.9.4.3. Reference HV model input parameters

All component input data for the reference HV model is predefined and located in the model directory:

"<root>\HILS_GTR\Vehicles\ReferenceHybridVehicleModel\ParameterData".

This directory contains files with the specific input data for:

(a) The (internal combustion) engine model : "para_engine_ref.m"

(b) The clutch model : "para_clutch_ref.m"

(c) The battery model : "para_battery_ref.m"

(d) The electric machine model : "para_elmachine_ref.m"

(e) The mechanical gearing : "para_mechgear_ref.m"

(f) The (shift) transmission model : "para_transmission_ref.m"

(g) The final gear model : "para_finalgear_ref.m"

(h) The vehicle chassis model : "para_chassis_ref.m"

(i) The test cycle : "para_drivecycle_ref.m"

(j) The hybrid control strategy : "ReferenceHVModel_Input.mat"

The hybrid control strategy is included in the reference HV model and its control parameters for the engine, electric machine, clutch and so on are defined in lookup tables and stored in the specified file.

A.9.4.4. Reference HV output parameters

A selected part of the test cycle as defined in Annex 1.b. covering the first 140 seconds is used to perform the SILS run with the reference HV model. The calculated data for the SILS run using the HILS system shall be recorded with at least 5 Hz and be compared to the reference output data stored in file "ReferenceHVModel_Output.mat" available in the HILS library directory:

"<root>\HILS_GTR\Vehicles\ReferenceHybridVehicleModel\SimResults".

The SILS run output data shall be rounded to the same number of significant digits as specified in the reference output data file and shall meet the criteria listed in Table 13.

A.9.5. Build and verification of the specific HV model

A.9.5.1. Introduction

This procedure shall apply as the build and verification procedure for the specific HV model as equivalent representation of the actual hybrid powertrain to be used with the HILS system setup in accordance with paragraph A.9.3.

A.9.5.2. General procedure

The diagram of Figure 23 provides an overview of the various steps towards the verified specific HV model.

Figure 23
Specific HV model build and verification flow diagram

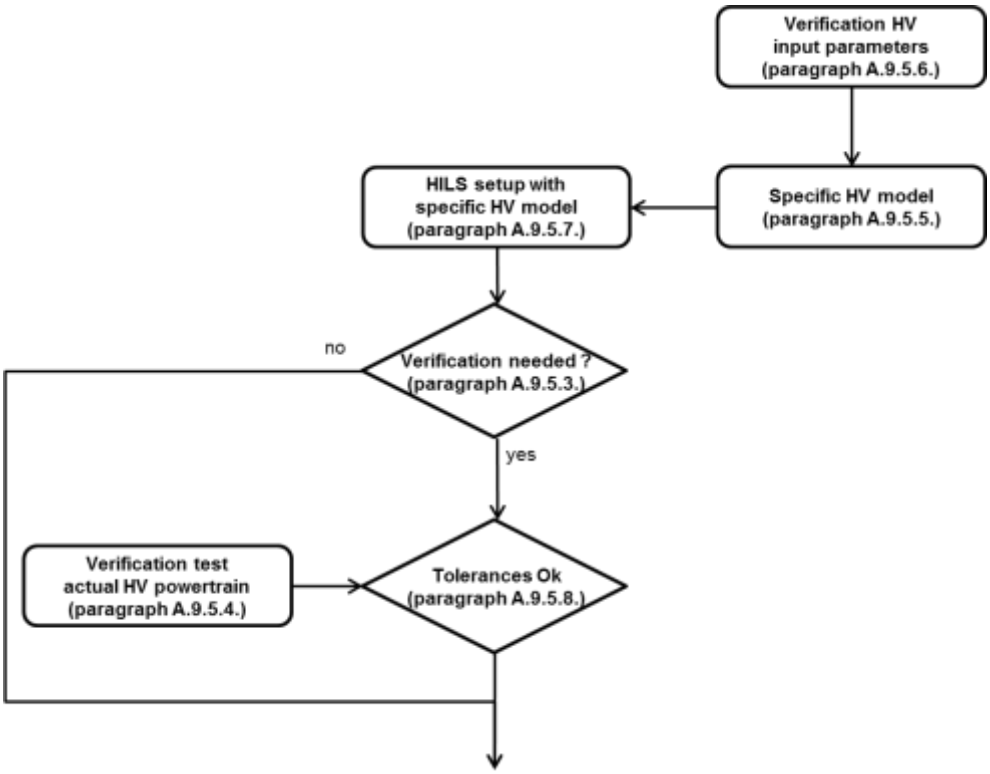

A.9.5.3. Cases requiring verification of specific HV model and HILS system

The verification aims at checking the operation and the accuracy of the simulated running of the specific HV model. The verification shall be conducted when the equivalence of the HILS system setup or specific HV model to the test hybrid powertrain needs to be confirmed.

In case any of following conditions applies, the verification process in accordance with paragraph A.9.5.4. through A.9.5.8. shall be required:

(a) The HILS system including the actual ECU(s) is run for the first time.

(b) The HV system layout has changed.

(c) Structural changes are made to component models.

(d) Different use of model component (e.g. manual to automated transmission).

(e) Changes are made to the interface model that have relevant impact on the hybrid system operation.

(f) A manufacturer specific component model is used for the first time.

The Type Approval or certification Authority may conclude that other cases exist and request verification.

The HILS system and specific HV model including the need for verification shall be subject to approval by the type approval or certification authority. All deviations that affect the above mentioned verification criteria shall be provided to the Type Approval or certification Authority along with the rationale for justification and all appropriate technical information as proof therefore, e.g. the deviation by changes to the HILS system hardware, modification of the response delay times or time constants of models. The technical information shall be based on calculations, simulations, estimations, description of the models, experimental results and so on.

A.9.5.4. Actual hybrid powertrain test

A.9.5.4.1. Specification and selection of the test hybrid powertrain

The test hybrid powertrain shall be the parent hybrid powertrain. If a new hybrid powertrain configuration is added to an existing family in accordance with paragraph 5.3.2., which becomes the new parent powertrain, HILS model validation is not required.

A.9.5.4.2. Test procedure

The verification test using the test hybrid powertrain (hereinafter referred to as the "actual powertrain test") which serves as the standard for the HILS system verification shall be conducted by either of the test methods described in paragraphs A.9.5.4.2.1. to A.9.5.4.2.2.

A.9.5.4.2.1. Powertrain dynamometer test

The test shall be carried out in accordance with the provisions of paragraphs A.10.3. and A.10.5. in order to determine the measurement items specified in paragraph A.9.5.4.4.

The measurement of the exhaust emissions may be omitted.

A.9.5.4.2.2. Chassis dynamometer test

A.9.5.4.2.2.1. General introduction

The test shall be carried out on a chassis dynamometer with adequate characteristics to perform the test cycle specified in Annex 1, paragraph (b).

The dynamometer shall be capable of performing an (automated) coastdown procedure to determine and set the correct road load values as follows:

(a) The dynamometer shall be able to accelerate the vehicle to a speed above the highest test cycle speed or the maximum vehicle speed, whichever is the lowest.

(b) Run a coastdown .

(c) Calculate and subtract the $Dyno_{measured}$ load coefficients from the $Dyno_{target}$ coefficients.

(d) Adjust the $Dyno_{settings}$.

(e) Run a verification coastdown.

The dynamometer shall automatically adjust its $Dyno_{settings}$ by repeating steps (a) through (e) above until the maximum deviation of the $Dyno_{measured}$ load curve is less than ±5 per cent of the $Dyno_{target}$ load curve for all individual speeds within the test range.

The $Dyno_{target}$ road load coefficients are defined as A, B and C and the corresponding road load is calculated as follows:

$$F_{roadload} = A + B \times v + C \times v^2 \quad (115)$$

Where:

$F_{roadload}$ is the dynamometer road load, N

$Dyno_{measured}$ are the A_m, B_m and C_m dynamometer coefficients calculated from the dynamometer coastdown run

$Dyno_{settings}$ are the A_{set}, B_{set} and C_{set} coefficients which command the road load simulation done by the dynamometer

$Dyno_{target}$ are the A_{target}, B_{target} and C_{target} dynamometer target coefficients in accordance with paragraphs A.9.5.4.2.2.2. through A.9.5.4.2.2.6.

Prior to execution of the dynamometer coastdown procedure, the dynamometer shall have been calibrated and verified in accordance with the dynamometer manufacturer specifications. The dynamometer and vehicle shall be preconditioned in accordance with good engineering judgement to stabilize the parasitic losses.

All measurement instruments shall meet the applicable linearity requirements of paragraph A.9.8.2.

All modifications or signals required to operate the hybrid vehicle on the chassis dynamometer shall be documented and reported to the type approval authorities or certification agency.

A.9.5.4.2.2.2. Vehicle test mass

The vehicle test mass ($m_{vehicle}$) shall be calculated using the hybrid system rated power (P_{rated}), as specified by the manufacturer for the actual test hybrid powertrain, as follows:

$$m_{vehicle} = 15.1 \times P_{rated}^{1.31} \quad (116)$$

Where:

$m_{vehicle}$ is the vehicle test mass, kg

P_{rated} is the hybrid system rated power, kW

A.9.5.4.2.2.3. Air resistance coefficients

The vehicle frontal area (A_{front}, m^2) shall be calculated as function of vehicle test mass in accordance with paragraph A.9.5.4.2.2.2. using following equations:

(a) For $m_{vehicle} \leq 18{,}050$ kg:

$$A_{front} = -1.69 \times 10^{-8} \times m_{vehicle}^2 + 6.33 \times 10^{-4} \times m_{vehicle} + 1.67 \quad (117)$$

or

(b) For $m_{vehicle}$ > 18,050 kg :

$$A_{front} = 7.59\ m^2 \quad (118)$$

The vehicle air drag resistance coefficient (C_{drag}) shall be calculated as follows:

$$C_{drag} = \frac{3.6^2 \times (0.00299 \times A_{front} - 0.000832) \times g}{0.5 \times \rho_a \times A_{front}} \quad (119)$$

Where:

g is the gravitational acceleration with a fixed value of 9.80665 m/s^2

ρ_a is the air density with a fixed value of 1.17 kg/m^3

A.9.5.4.2.2.4. Rolling resistance coefficient

The rolling resistance coefficient (f_{roll}) shall be calculated as follows:

$$f_{roll} = 0.00513 + \frac{17.6}{m_{vehicle}} \quad (120)$$

Where:

$m_{vehicle}$ is the test vehicle mass in accordance with paragraph A.9.5.4.2.2.2., kg

A.9.5.4.2.2.5. Rotating inertia

The inertia setting used by the dynamometer to simulate the vehicle inertia shall equal the vehicle test mass in accordance with paragraph A.9.5.4.2.2.2. No correction shall be carried out to account for axle inertias in the dynamometer load settings.

A.9.5.4.2.2.6. Dynamometer settings

The road load at a certain vehicle speed v shall be calculated using equation 115.

The A, B and C coefficients are as follows:

$$A = m_{vehicle} \times g \times f_{roll} \quad (121)$$

$$B = 0 \quad (122)$$

$$C = \frac{1}{2} \times p_a \times C_{drag} \times A_{front} \quad (123)$$

Where:

v is the vehicle speed, m/s

$m_{vehicle}$ is the vehicle test mass in accordance with equation 116, kg

f_{roll} is the rolling resistance coefficient specified in accordance with equation 120.

g is the gravitational acceleration as specified in accordance with paragraph A.9.5.4.2.2.3., m/s^2

ρ_a is the ambient air density as specified in accordance with paragraph A.9.5.4.2.2.3., kg/m^3

A_{front} is the vehicle frontal area as specified in accordance with equations 117 or 118, m^2

C_{drag} is the vehicle air drag coefficient as specified in accordance with equation 119.

A.9.5.4.2.2.7. Dynamometer road load simulation mode

The dynamometer shall be operated in a mode that it simulates the vehicle inertia and the road load curve defined by the $Dyno_{setting}$ coefficients.

The dynamometer shall be capable of correctly implementing road gradients as defined in accordance with the test cycle in Annex 1, paragraph (b) so that A effectively satisfies:

$$A = m_{vehicle} \times g \times f_{roll} \times \cos(\alpha_{road}) + m_{vehicle} \times g \times \sin(\alpha_{road}) \quad (124)$$

$$\alpha_{road}) = \text{atan}(\alpha_{road})/100) \quad (125)$$

Where:

α_{road} is the road gradient, rad

α_{road_pct} is the road gradient as specified in Annex 1, paragraph (b), per cent

A.9.5.4.3. Test conditions

A.9.5.4.3.1. Test cycle run

The test shall be conducted as a time-based test by running the full test cycle as defined in Annex 1, paragraph (b) using the hybrid system rated power in accordance with the manufacturer specification.

A.9.5.4.3.2. Various system settings

The following conditions shall be met, if applicable:

(a) The road gradient shall not be fed into the ECU (level ground position) or inclination sensor should be disabled.

(b) The ambient test conditions shall be between 20 °C and 30 °C.

(c) Ventilation systems with adequate performance shall be used to condition the ambient temperature and air flow condition to represent on-road driving conditions.

(d) Continuous brake systems shall not be used or shall be switched off if possible.

(e) All auxiliary or PTO systems shall be turned off or their power consumption measured. If measurement is not possible, the power consumption shall be based on calculations, simulations, estimations, experimental results and so on. Alternatively, an external power supply for 12/24 V systems may be used.

(f) Prior to test start, the test powertrain may be key-on, but not enabling a driving mode, so that data communication for recording may be possible. At test start, the test powertrain shall be fully enabled to the driving mode.

(g) The chassis dynamometer roller(s) shall be clean and dry. The driven axle load shall be sufficient to prevent tyre slip on the chassis dynamometer roller(s). Supplementary ballast or lashing systems to secure sufficient axle load may be applied.

(h) If the desired deceleration of the test cycle cannot be achieved by braking within the allowable errors in accordance with paragraph A.9.5.4.3.3., e.g. a heavy vehicle with one axle on the chassis dynamometer roller(s), the chassis dynamometer may assist decelerating the vehicle. This may result in a modification of the applied road gradient as specified in accordance with Annex 1.b. during these decelerations.

(i) Preconditioning of test systems:

For cold start cycles, the systems shall be soaked so that the system temperatures are between 20 °C and 30 °C.

A warm start cycle shall be preconditioned by running of the complete test cycle in accordance with Annex 1, paragraph (b) followed by a 10 minute (hot) soak.

A.9.5.4.3.3. Validation of vehicle speed

The allowable errors in speed and time during the actual powertrain test shall be, at any point during each running mode, within ±4.0 km/h in speed and ±2.0 seconds in time as shown with the coloured section in Figure 24. Moreover, if deviations are within the tolerance corresponding to the setting items posted in the left column of Table 14, they shall be deemed to be within the allowable errors. The duration of deviations at gear change operation as specified in accordance with paragraph A.9.5.8.1. shall not be included in the total cumulative time. In addition, this provision on error duration shall not apply in case the demanded accelerations and speeds are not obtained during periods where the accelerator pedal is fully depressed (maximum performance shall be requested from hybrid powertrain).

Table 14
Tolerances for vehicle speed deviations in chassis dynamometer test

Setting item	*Tolerance*
1. Tolerable time range for one deviation	maximum ±2.0 seconds
2. Tolerable time range for the total cumulative value of (absolute) deviations	maximum 2.0 seconds
3. Tolerable speed range for one deviation	maximum ±4.0 km/h

Figure 24
Tolerances for speed deviation and duration during chassis dynamometer test

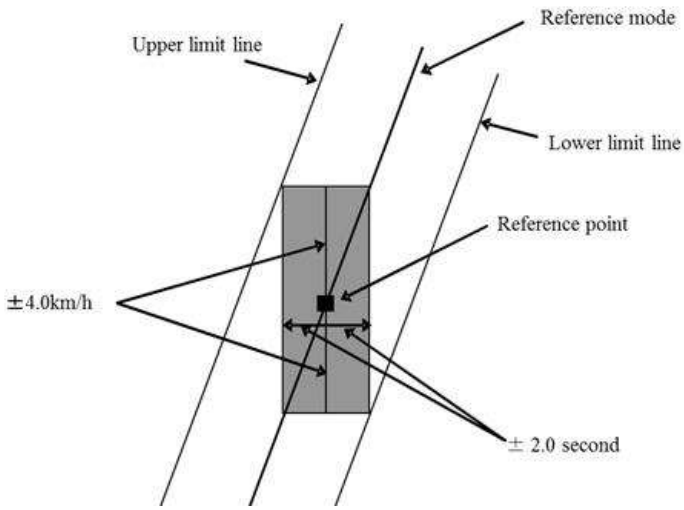

A.9.5.4.3.4. Test data analysis

The testing shall allow for analysing the measured data in accordance with the following two conditions:

(a) Selected part of test cycle, defined as the period covering the first 140 seconds;

(b) The full test cycle.

A.9.5.4.4. Measurement items

For all applicable components, at least the following items shall be recorded using dedicated equipment and measurement devices (preferred) or ECU data (e.g. using CAN signals) in order to enable the verification:

(a) Target and actual vehicle speed (km/h);

(b) Quantity of driver manipulation of the vehicle (typically accelerator, brake, clutch and shift operation signals, and alike) or quantity of manipulation on the (engine) dynamometer (throttle valve opening angle). All signals shall be in units as applicable to the system and suitable for conversion towards use in conversion and interpolation routines;

(c) Engine speed (min^{-1}) and engine command values (-, per cent, Nm, units as applicable) or, alternatively, fuel injection value (e.g. mg/str);

(d) Electric motor speed (min^{-1}), torque command value (-, per cent, Nm as applicable) (or their respective physically equivalent signals for non-electric energy converters);

(e) (Rechargeable) energy storage system power (kW), voltage (V) and current (A) (or their respective physically equivalent signals for non-electric RESS) .

The accuracy of measuring devices shall be in accordance with the provisions of paragraphs 9.2. and A.9.8.2.

The sampling frequency for all signals shall be 5 Hz or higher.

The recorded CAN signals in (d) and (e) shall be used for post processing using actual speed and the CAN (command) value (e.g. fuel injection amount) and the specific characteristic component map as obtained in accordance with paragraph A.9.8. to obtain the value for verification by means of the Hermite interpolation procedure (in accordance with Appendix 1 to Annex 9).

All recorded and post process data so obtained shall become the actually-measured data for the HILS system verification (hereinafter referred to as the "actually-measured verification values").

A.9.5.5. Specific HV model

The specific HV model for approval shall be defined in accordance with paragraph A.9.3.5.(b) and its input parameters defined in accordance with paragraph A.9.5.6.

A.9.5.6. Specific HV model verification input parameters

A.9.5.6.1. General introduction

Input parameters for the applicable specific HV model components shall be defined as outlined in paragraphs A.9.5.6.2. to A.9.5.6.16.

A.9.5.6.2. Engine characteristics

The parameters for the engine torque characteristics shall be the table data obtained in accordance with paragraph A.9.8.3. However, values equivalent to or lower than the minimum engine revolution speed may be added.

A.9.5.6.3. Electric machine characteristics

The parameters for the electric machine torque and electric power consumption characteristics shall be the table data obtained in accordance with paragraph A.9.8.4. However, characteristic values at a revolution speed of 0 rpm may be added.

A.9.5.6.4. Battery characteristics

The parameters for the battery model shall be the input data obtained in accordance with paragraph A.9.8.5.

A.9.5.6.5. Capacitor characteristics

The parameters for the capacitor model shall be the data obtained in accordance with paragraph A.9.8.6.

A.9.5.6.6. Vehicle test mass

The vehicle test mass shall be defined as for the actual hybrid powertrain test in accordance with paragraph A.9.5.4.2.2.2.

A.9.5.6.7. Air resistance coefficients

The air resistance coefficients shall be defined as for the actual hybrid powertrain test in accordance with paragraph A.9.5.4.2.2.3.

A.9.5.6.8. Rolling resistance coefficient

The rolling resistance coefficients shall be defined as for the actual hybrid powertrain test in accordance with paragraph A.9.5.4.2.2.4.

A.9.5.6.9. Wheel radius

The wheel radius shall be the manufacturer specified value as used in the actual test hybrid powertrain.

A.9.5.6.10. Final gear ratio

The final gear ratio shall be the manufacturer specified ratio representative for the actual test hybrid powertrain.

A.9.5.6.11. Transmission efficiency

The transmission efficiency shall be the manufacturer specified value for the transmission of the actual test hybrid powertrain.

A.9.5.6.12. Clutch maximum transmitted torque

For the maximum transmitted torque of the clutch and the synchronizer, the design value specified by the manufacturer shall be used.

A.9.5.6.13. Gear change period

The gear-change periods for a manual transmission shall be the actual test values.

A.9.5.6.14. Gear change method

Gear positions at the start, acceleration and deceleration during the verification test shall be the respective gear positions in accordance with the specified methods for the types of transmission listed below:

(a) For manual shift transmission: gear positions are defined by actual test values.

(b) For automated shift transmission (AMT) or automatic gear box (AT): gear positions are generated by the shift strategy of the actual transmission ECU during the HILS simulation run and shall not be the recorded values from the actual test.

A.9.5.6.15. Inertia moment of rotating sections

The inertia for all rotating sections shall be the manufacturer specified values representative for the actual test hybrid powertrain.

A.9.5.6.16. Other input parameters

All other input parameters shall have the manufacturer specified value representative for the actual test hybrid powertrain.

A.9.5.7. Specific HV model HILS run for verification

A.9.5.7.1. Method for HILS running

Use the HILS system pursuant to the provisions of paragraph A.9.3. and include the specific HV model for approval with its verification parameters (in accordance with paragraph A.9.5.6.) to perform a simulated running pursuant to paragraph A.9.5.7.2. and record the calculated HILS data related to paragraph A.9.5.4.4. The data so obtained is the HILS simulated running data for HILS system verification (hereinafter referred to as the "HILS simulated running values").

Auxiliary loads measured in the actual test hybrid powertrain may be used as input to the auxiliary load models (either mechanical or electrical).

A.9.5.7.2. Running conditions

The HILS running test shall be conducted as one or two runs allowing for both of the following two conditions to be analysed (see Figure 25):

(a) Selected part of test cycle shall cover the first 140 seconds of the test cycle as defined in Annex 1, paragraph (b) for which the road gradient are calculated using the manufacturer specified hybrid system rated power also applied for the actual powertrain test. The driver model shall output the recorded values as obtained in the actual hybrid powertrain test (paragraph A.9.5.4.) to actuate the specific HV model.

(b) The full test cycle as defined in Annex 1.b. for which the road gradients are calculated using the manufacturer specified hybrid system rated power also applied for the actual hybrid powertrain test. The driver model shall output all relevant signals to actuate the specific HV model based on either the reference test cycle speed or the actual vehicle speed as recorded in accordance with paragraph A.9.5.4.

If the manufacturer declares that the resulting HEC engine operating conditions for cold and hot start cycles are different (e.g. due to the application of a specific cold start strategy), a verification shall be carried out by use of the predicted temperature method in accordance with paragraphs A.9.6.2.18. and A.9.2.6.3. It shall then be proven that the predicted temperature profile of the elements affecting the hybrid control operation is equivalent to the temperatures of those elements measured during the HEC exhaust emission test run.

In order to reflect the actual hybrid powertrain test conditions (e.g. temperatures, RESS available energy content), the initial conditions shall be the same as those in the actual test and applied to component parameters, interface parameters and so on as needed for the specific HV model.

Figure 25
Flow diagram for verification test HILS system running with specific HV model

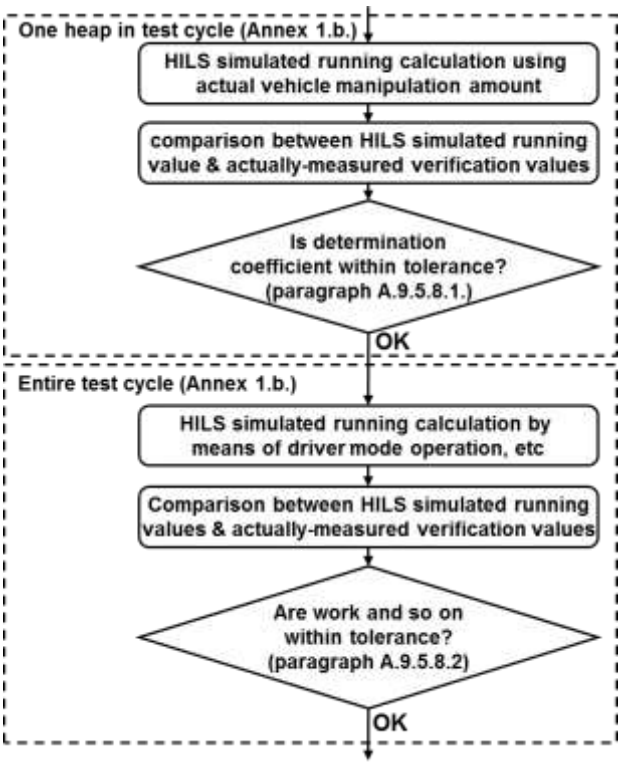

A.9.5.8. Validation statistics for verification of specific HV model for approval

A.9.5.8.1. Confirmation of correlation on the selected part of the test cycle

Correlation between the actually-measured verification values (as reference values) and the HILS simulated running values shall be verified for the selected test cycle part in accordance with paragraph A.9.5.7.2.(a). Table 15 shows the requirements for the tolerance criteria between those values.

The following points may be omitted from the regression analysis:

(a) The gear change period

(b) 1.0 second before and after the gear change period

A gear change period is defined from the actually-measured values as:

(i) For (discrete) gear change systems that require the disengagement and engagement of a clutch system, the period from the disengagement of the clutch to the engagement of the clutch,

Or

(ii) For (discrete) gear change systems that do not require the disengagement or engagement of a clutch system, the period from the moment a gear is disengaged to the moment another gear is engaged.

The omission of test points shall not apply for the calculation of the engine work.

Table 15
Tolerances (for the selected part of the test cycle) for actually measured and HILS simulated running values for specific HV model verification

	Vehicle	*Engine*		*Electric motor (or equivalent)*		*Rechargeable storage device*
	Speed	*Torque*	*Power*	*Torque*	*Power*	*Power*
Coefficient of determination, r^2	> 0.97	> 0.88	> 0.88	> 0.88	> 0.88	> 0.88

A.9.5.8.2. Overall verification for complete test cycle

A.9.5.8.2.1. Verification items and tolerances

Correlation between the actually-measured verification values and the HILS simulated running values shall be verified for the full test cycle (in accordance with paragraph A.9.5.7.2.(b).).

The following points may be omitted from the regression analysis:

(a) The gear change period,

(b) 1.0 second before and after the gear change period.

A gear change period is defined from the actually-measured values as:

(a) For gear change systems that require the disengagement and engagement of a clutch system, the period from the disengagement of the clutch to the engagement of the clutch,

or

(b) For gear change systems that do not require the disengagement or engagement of a clutch system, the period from the moment a gear is disengaged to the moment another gear is engaged.

The omission of test points shall not apply for the calculation of the engine work.

For the specific HV model to be considered valid, the criteria of Table 16 and those of paragraph A.9.5.8.1. shall be met.

Table 16
Tolerances (for full test cycle) for actually measured verification values and HILS simulated running values

	Vehicle	*Engine*	*Positive engine work*
	Speed	*Torque*	$\frac{W_{ice_HILS}}{W_{ice_test}}$
Coefficient of determination, r^2	minimum 0.97	minimum 0.88	
Conversion ratio			0.97 to 1.03

Where:

W_{ice_HILS} is the engine work in the HILS simulated running, kWh

W_{ice_test} is the engine work in the actual powertrain test, kWh

A.9.5.8.2.2. Calculation method for verification items

The engine torque, power and the positive work shall be acquired by the following methods, respectively, in accordance with the test data enumerated below:

(a) Actually-measured verification values in accordance with paragraph A.9.5.4.:

Methods that are technically valid, such as a method where the value is calculated from the operating conditions of the hybrid system (revolution speed, shaft torque) obtained by the actual hybrid powertrain test, using the input/output voltage and current to/from the electric machine (high power) electronic controller, or a method where the value is calculated by using the data such acquired pursuant the component test procedures in paragraph A.9.8.

(b) HILS simulated running values in accordance with paragraph A.9.5.7:

A method where the value is calculated from the engine operating conditions (speed, torque) obtained by the HILS simulated running.

A.9.5.8.2.3. Tolerance of net energy change for RESS

The net energy changes in the actual hybrid powertrain test and that during the HILS simulated running shall satisfy the following equation:

$$\left| \Delta E_{HILS} - \Delta E_{test} \right| / W_{ice_HILS} < 0.01 \qquad (126)$$

Where:

ΔE_{HILS} is the net energy change of RESS during the HILS simulated running, kWh

ΔE_{test} is the net energy change of RESS during the actual powertrain test, kWh

W_{ice_HILS} is the positive engine work from the HILS simulated run, kWh

And where the net energy change of the RESS shall be calculated as follows in case of:

(a) Battery

$$\Delta E = \Delta Ah \times V_{\text{nominal}} \quad (127)$$

Where:

ΔAh is the electricity balance obtained by integration of the battery current, Ah

V_{nominal} is the rated nominal voltage, V

(b) Capacitor

$$\Delta E = 0.5 \times C_{\text{cap}} \times \left(U_{final}^2 - U_{init}^2\right) \quad (128)$$

Where:

C_{cap} is the rated capacitance of the capacitor, F

U_{init} is the initial voltage at start of test, V

U_{final} is the final voltage at end of test, V

(c) Flywheel:

$$\Delta E = 0.5 \times J_{\text{flywheel}} \times \left(\frac{\pi}{30}\right)^2 \times \left(n_{final}^2 - n_{init}^2\right) \quad (129)$$

Where:

J_{flywheel} is the flywheel inertia, kgm^2

n_{init} is the initial speed at start of test, min^{-1}

n_{final} is the final speed at end of test, min^{-1}

(d) Other RESS:

The net change of energy shall be calculated using physically equivalent signal(s) as for cases (a) through (c) in this paragraph. This method shall be reported to the Type Approval Authorities or certification Agency.

A.9.5.8.2.4. Additional provision on tolerances in case of fixed point engine operation

In case of fixed point engine operating conditions (both speed and torque), the verification shall be valid when the criteria for vehicle speed, positive engine work and engine running duration (same criteria as positive engine work) are met.

A.9.6. Creation of the hybrid engine cycle

A.9.6.1. General introduction

Using the verified HILS system setup with the specific HV model for approval, the creation of the hybrid engine cycle shall be carried out in accordance with the provisions of paragraphs A.9.6.2 to A.9.6.5. Figure 26 provides a flow diagram of the required steps for guidance in this process.

Figure 26
Flow diagram for Creation of the Hybrid Engine Cycle

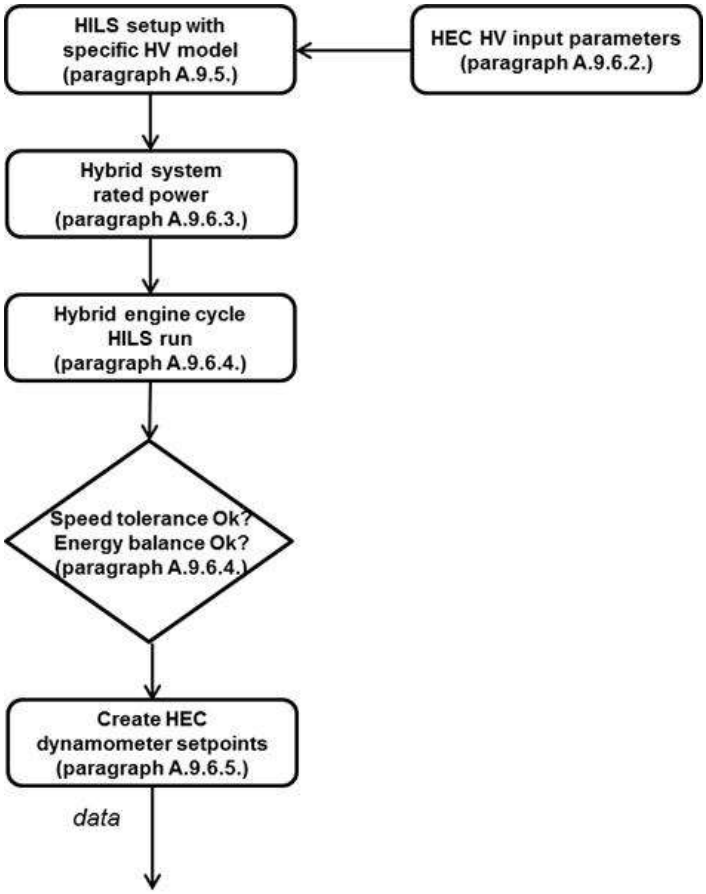

A.9.6.2. HEC run input parameters for specific HV model

A.9.6.2.1. General introduction

The input parameters for the specific HV model shall be specified as outlined in paragraphs A.9.6.2.2. to A.9.6.2.19. such as to represent a generic heavy-duty vehicle with the specific hybrid powertrain, which is subject to approval. All input parameter values shall be rounded to 4 significant digits (e.g. x.xxxEyy in scientific representation).

A.9.6.2.2. Engine characteristics

The parameters for the engine torque characteristics shall be the table data obtained in accordance with paragraph A.9.8.3. However, values equivalent to or lower than the minimum engine revolution speed may be added.

A.9.6.2.3. Electric machine characteristics

The parameters for the electric machine torque and electric power consumption characteristics shall be the table data obtained in accordance with paragraph A.9.8.4. However, characteristic values at a revolution speed of 0 min^{-1} may be added.

A.9.6.2.4. Battery characteristics

The parameters for the battery model shall be the data obtained in accordance with paragraph A.9.8.5.

A.9.6.2.5. Capacitor characteristics

The parameters for the capacitor model shall be the data obtained in accordance with paragraph A.9.8.6.

A.9.6.2.6. Vehicle test mass

The vehicle test mass shall be calculated as function of the system rated power (as declared by the manufacturer) in accordance with equation 116.

A.9.6.2.7. Vehicle frontal area and air drag coefficient

The vehicle frontal area shall be calculated using equation 117 and 118 using the test vehicle mass in accordance with paragraph A.9.6.2.6.

The vehicle air drag resistance coefficient shall be calculated using equation 119 and the test vehicle mass in accordance with paragraph A.9.6.2.6.

A.9.6.2.8. Rolling resistance coefficient

The rolling resistance coefficient shall be calculated by equation 120 using the test vehicle mass in accordance with paragraph A.9.6.2.6.

A.9.6.2.9. Wheel radius

The wheel radius shall be defined as 0.40 m or a manufacturer specified value. In case a manufacturer specified value is used, the wheel radius that represents the worst case with regard to exhaust emissions shall be applied.

A.9.6.2.10. Final gear ratio and efficiency

The efficiency shall be set to 0.95.

The final gear ratio shall be defined in accordance with the provisions for the specified HV type:

(a) For parallel HV when using the standardized wheel radius, the final gear ratio shall be calculated as follows:

$$r_{\mathrm{fg}} = \frac{60 \times 2 \times \pi \times r_{\mathrm{wheel}}}{1000 \times v_{\max}} \times \frac{0.566 \times \left(0.45 \times n_{\mathrm{lo}} + 0.45 \times n_{\mathrm{pref}} + 0.1 \times n_{\mathrm{hi}} - n_{\mathrm{idle}}\right)}{r_{\mathrm{gear_high}}} \times 2.0327 + n_{\mathrm{idle}} \qquad (130)$$

Where:

$r_{\mathrm{gear_high}}$ is the ratio of the highest gear number for the transmission

r_{wheel} is the dynamic tyre radius in accordance with paragraph A.9.6.2.9., m

$v_{\max}$ is the maximum vehicle speed with a fixed value of 87 km/h

n_{lo}, n_{hi}, n_{idle}, n_{pref} are the reference engine speeds in accordance with paragraph 7.4.6.

(b) For parallel HV when using a manufacturer specified wheel radius, the rear axle ratio shall be the manufacturer specified ratio representative for the worst case exhaust emissions.

(c) For series HV, the rear axle ratio shall be the manufacturer specified ratio representative for the worst case exhaust emissions.

A.9.6.2.11. Transmission efficiency

In case of a parallel HV, the efficiency of each gear shall be set to 0.95.

Or:

In case of a series HV, the following shall be used:

The efficiency of the transmission shall be 0.95 or can be a manufacturer specified value for the test hybrid powertrain for fixed gear or 2-gear transmissions. The manufacturer shall then provide all relevant information and its justification to the Type Approval or certification Authority.

A.9.6.2.12. Transmission gear ratio

The gear ratios of the (shift) transmission shall have the manufacturer specified values for the test hybrid powertrain.

A.9.6.2.13. Transmission gear inertia

The inertia of each gear of the (shift) transmission shall have the manufacturer specified value for the test hybrid powertrain.

A.9.6.2.14. Clutch maximum transmitted torque

For the maximum transmitted torque of the clutch and the synchronizer, the design value specified by the manufacturer for the test hybrid powertrain shall be used.

A.9.6.2.15. Gear change period

The gear-change period for a manual transmission shall be set to one (1.0) second.

A.9.6.2.16. Gear change method

Gear positions at the start, acceleration and deceleration during the approval test shall be the respective gear positions in accordance with the specified methods for the types of HV listed below:

(a) Parallel HV fitted with a manual shift transmission: the gear positions shall be defined by the shift strategy in accordance with paragraph A.9.7.4.3. and shall be part of the driver model.

(b) Parallel HV fitted with automated shift transmission or automatic shift transmission: the gear positions shall be generated by the shift strategy of the actual transmission ECU during the HILS simulation.

(c) Series HV: in case of a shift transmission being applied, the gear positions shall be defined by the shift strategy of the actual transmission ECU control.

A.9.6.2.17. Inertia of rotating sections

Different inertia (J, kgm^2) of the rotating sections shall be used for the respective conditions as specified below:

In case of a parallel HV:

(a) The inertia of the section between the (shift) transmission output shaft up to and including the wheels shall be calculated using the vehicle curb mass $m_{\text{vehicle,0}}$ and wheel radius r_{wheel} (in accordance with paragraph A.9.6.2.9.) as follows:

$$J_{\text{drivetrain}} = 0.07 \times m_{\text{vehicle0}} \times r_{\text{wheel}}^2 \quad (131)$$

The vehicle curb mass $m_{\text{vehicle,0}}$ shall be calculated as function of the vehicle test mass in accordance with following equations:

(1) For $m_{vehicle} \leq 35{,}240$ kg:

$$m_{vehicle,0} = -7.38 \times 10^{-6} \times m^2_{vehicle} + 0.604 \times m_{vehicle} \quad (132)$$

or

(2) For $m_{vehicle} > 35{,}240$ kg:

$$m_{vehicle} = 12{,}120 \text{ kg} \quad (133)$$

The wheel inertia parameter shall be used for the total drivetrain inertia. All inertias parameters from the transmission output shaft up to, and excluding, the wheel shall be set to zero.

(b) The inertia of the section from the engine to the output of the (shift) transmission shall be the manufacturer specified value(s) for the test hybrid powertrain.

In case of a series HV:

The inertia for the generator(s), wheel hub electric motor(s) or central electric motor(s) shall be the manufacturer specified value for the test hybrid powertrain.

A.9.6.2.18. Predicted input temperature data

In case the predicted temperature method is used, the predicted temperature profile of the elements affecting the hybrid control shall be defined through input parameters in the software interface system.

A.9.6.2.19. Other input parameters

All auxiliary loads (mechanical and electrical) shall be disabled or effectively set to zero during the HILS run for the hybrid engine cycle generation.

All other input parameters shall have the manufacturer specified value for the test hybrid powertrain.

A.9.6.3. Hybrid system rated power determination

The rated power of the hybrid system shall be determined as follows:

(a) The initial energy level of the RESS at start of the test shall be equal or higher than 90 per cent of the operating range between the minimum and maximum RESS energy levels that occur in the in-vehicle usage of the storage as specified by the manufacturer.

Prior to each test, it shall be ensured that the conditions of all hybrid system components shall be within their normal operating range as declared by the manufacturer and restrictions (e.g. power limiting, thermal limits, etc.) shall not be active.

Figure 27
Initial energy level at start of test

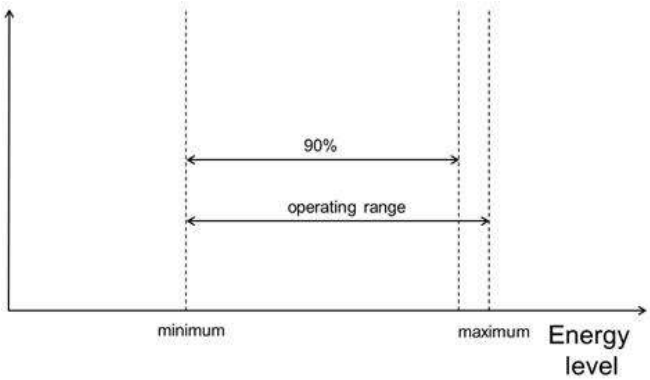

(b) Set maximum driver demand for a full load acceleration starting from the initial speed condition and applying the respective constant road gradient as specified in Table 17. The test run shall be stopped 30 seconds after the vehicle speed is no longer increasing to values above the already observed maximum during the test.

(c) Record hybrid system speed and torque values at the wheel hub (HILS chassis model output signals in accordance with paragraph A.9.7.3.) with 100 Hz to calculate P_{sys_HILS} from the wheel speed and wheel hub (drive) torque.

(d) Repeat (a), (b), (c) for all test runs specified in Table 17. All deviations from Table 17 conditions shall be reported to the Type Approval and certification Authority along with all appropriate information for justification therefore.

All provisions defined in (a) shall be met at the start of the full load acceleration test run.

Table 17
Hybrid system rated power determination conditions

Road gradient (per cent)	*Initial vehicle speed (km/h)*		
	0	30	60
0	test #1	test #4	test #7
2	test #2	test #5	test #8
6	test #3	test #6	test #9

(e) Calculate the hybrid system power for each test run from the recorded signals as follows:

$$P_{sys} = P_{sys_HILS} \times \left(\frac{1}{0.95}\right)^2 \quad (134)$$

Where:

P_{sys} is the hybrid system power, kW

P_{sys_HILS} is the calculated hybrid system power in accordance with paragraph A.9.6.3.(c), kW

(f) The hybrid system rated power shall be the highest determined power where the coefficient of variation *COV* is below 2 per cent:

$$P_{rated} = max(P_{sys}(COV < 0.02)) \quad (135)$$

For the results of each test run, the power vector $P_{\mu}(t)$ shall be calculated as the moving averaging of 20 consecutive samples of P_{sys} in the 100 Hz signal so that $P_{\mu}(t)$ effectively shall be a 5 Hz signal.

The standard deviation $\sigma(t)$ is calculated using the 100 Hz and 5 Hz signals:

$$\sigma(t) = \sqrt{\frac{1}{N}\sum_{i=1}^{N}\left(x_i - P_{\mu}(t)\right)^2} \quad (136)$$

Where:

x_i are the *N* samples in the 100 Hz signal previously used to calculate the respective $P_{\mu}(t)$ values at the time step t, kW

N are the 20 samples used for averaging

The resulting power and covariance signals shall now be effectively 5 Hz traces covering the test time and these shall be used to determine hybrid system rated power.

The covariance *COV*(t) shall be calculated as the ratio of the standard deviation $\sigma(t)$ to the mean value of power $P_{\mu}(t)$ for each time step t.

$$COV(t) = \sigma(t) / P_{\mu}(t) \quad (137)$$

If the determined hybrid system rated power is outside ±3 per cent of the hybrid system rated power as declared by the manufacturer, the HILS verification in accordance with paragraph A.9.5. shall be repeated using the HILS determined hybrid system rated power instead of the manufacturer declared value.

If the determined hybrid system rated power is inside ±3 per cent of the hybrid system rated power as declared by the manufacturer, the declared hybrid system rated power shall be used.

A.9.6.4. Hybrid engine cycle HILS run

A.9.6.4.1. General introduction

The HILS system shall be run in accordance with paragraphs A.9.6.4.2. through A.9.6.4.5. for the creation of the hybrid engine cycle using the full test cycle as defined in Annex 1, paragraph (b).

A.9.6.4.2. HILS run data to be recorded

At least following input and calculated signals from the HILS system shall be recorded at a frequency of 5 Hz or higher (10 Hz recommended):

(a) Target and actual vehicle speed (km/h).

(b) (Rechargeable) energy storage system power (kW), voltage (V) and current (A) (or their respective physically equivalent signals in case of another type of RESS).

(c) Hybrid system speed (min^{-1}), hybrid system torque (Nm), hybrid system power (kW) at the wheel hub (in accordance with paragraphs A.9.2.6.2. and A.9.7.3.).

(d) Engine speed (min^{-1}), engine torque (Nm) and engine power (kW).

(e) Electric machine speed(s) (min^{-1}), electric machine torque(s) (Nm) and electric machine mechanical power(s) (kW) as well as the electric machine(s) (high power) controller current (A), voltage and electric power (kW) (or their physically equivalent signals in case of a non-electrical HV powertrain).

(f) Quantity of driver manipulation of the vehicle (typically accelerator, brake, clutch and shift operation signals and so on).

A.9.6.4.3. HILS run adjustments

In order to satisfy the tolerances defined in paragraphs A.9.6.4.4. and A.9.6.4.5., following adjustments in interface and driver may be carried out for the HILS run:

(a) Quantity of driver manipulation of the vehicle (typically accelerator, brake, clutch and manual gear shift operation signals).

(b) Initial value for available energy content of Rechargeable Energy Storage System.

In order to reflect cold or hot start cycle conditions, following initial temperature conditions shall be applied to component, interface parameters, and so on:

(a) 25 °C for a cold start cycle.

(b) The specific warmed-up state operating condition for a hot start cycle, either following from a cold start and soak period by HILS run of the model or in accordance with the manufacturer specified running conditions for the warmed up operating conditions.

A.9.6.4.4. Validation of vehicle speed

The allowable errors in speed and time during the simulated running shall be, at any point during each running mode, within ±2.0 km/h in speed and ±1.0 second in time as shown with the coloured section in Figure 28. Moreover, if deviations are within the tolerance corresponding to the setting items posted in the left column of Table 18, they shall be deemed to be within the allowable errors. Time deviations at the times of test start and gear change operation, however, shall not be included in the total cumulative time. In addition, this provision shall not apply in case demanded accelerations and speeds are not obtained during periods where the accelerator pedal is fully depressed (maximum performance shall be requested from hybrid powertrain).

Table 18
Tolerances for vehicle speed deviations

Setting item		*Tolerance*
1.	Tolerable time range for one deviation	< ±1.0 second
2.	Tolerable time range for the total cumulative value of (absolute) deviations	< 2.0 seconds
3.	Tolerable speed range for one deviation	< ±2.0 km/h

Figure 28
Tolerances for speed deviation and duration during HILS simulated running

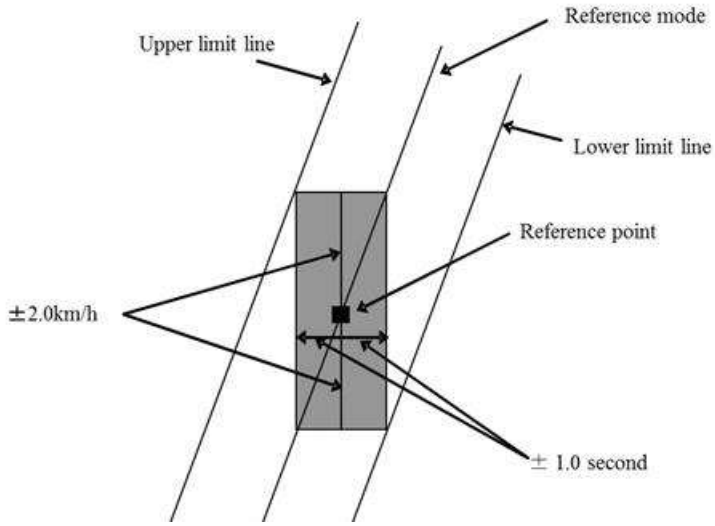

A.9.6.4.5. Validation of RESS net energy change

The initial available energy content of the RESS shall be set so that the ratio of the RESS net energy change to the (positive) engine work shall satisfy the following equation:

$$|\Delta E/W_{ice_HILS}| < 0.03 \quad (138)$$

Where:

ΔE is the net energy change of the RESS in accordance with paragraph A.9.5.8.2.3.(a)-(d), kWh

W_{ice_HILS} is the engine work in the HILS simulated run, kWh

A.9.6.5. Hybrid engine cycle set points

A.9.6.5.1. Derivation of HEC dynamometer set points

From the HILS system generated data in accordance with paragraph A.9.6.4., select and define the engine speed and torque values at a frequency of at least 5 Hz (10 Hz recommended) as the command set points for the engine exhaust emission test on the engine dynamometer.

If the engine is not capable of following the cycle, smoothing of the 5 Hz or higher frequency signals to 1 Hz is permitted with the prior approval of the type approval or certification authority. In such case, the manufacturer shall demonstrate to the type approval or certification authority, why the engine cannot satisfactorily be run with a 5 Hz or higher frequency, and provide the technical details of the smoothing procedure and justification as to its use will not have an adverse effect on emissions.

A.9.6.5.2. Replacement of test torque value at time of motoring

When the test torque command set point obtained in paragraph A.9.6.5.1. is negative, this negative torque value shall be replaced by a motoring request on the engine dynamometer.

A.9.7. HILS component models

A.9.7.1. General introduction

Component models in accordance with paragraphs A.9.7.2. to A.9.7.9. shall be used for constructing both the reference HV model and the specific HV model. A Matlab®/Simulink® library environment that contains implementation of the component models in accordance with these specifications is available at:

http://www.unece.org/trans/main/wp29/wp29wgs/wp29gen/wp29globregistry.html .

Parameters for the component models are defined in three (3) categories, regulated parameters, manufacturer specified parameters and tuneable parameters. Regulated parameters are parameters which shall be determined in accordance with paragraphs A.9.5.6., A.9.6.2., A.9.8. and A.10.5.2. The manufacturer specified parameters are model parameters that are vehicle specific and that do not require a specific test procedure in order to be determined. The tuneable parameters are parameters that can be used to tune the performance of the component model when it is working in a complete vehicle system simulation.

A.9.7.2. Auxiliary system model

A.9.7.2.1. Electric auxiliary model

The electrical auxiliary system, valid for both high and low voltage auxiliary application, shall be modelled as a controllable electrical power loss, $P_{\mathrm{el,aux}}$. The current that is discharging the electrical energy storage, $i_{el.\mathrm{aux}}$, is determined as:

$$i_{\mathrm{el,aux}} = P_{\mathrm{el,aux}}/u \qquad (139)$$

Where:

$P_{\mathrm{el,aux}}$ is the electric auxiliary power demand, W

u is the electrical DC-bus voltage, V

$i_{\mathrm{el,aux}}$ is the auxiliary current, A

For the model as available in the standardized HILS library, the model parameter and interfacing definition is given in Table 19.

Table 19
Electrical auxiliary model parameters and interface

Type / Bus	*Name*	*Unit*	*Description*	*Reference*
Command signal	$P_{\mathrm{el,aux}}$	W	Control signal for auxiliary system power demand	aux_pwrElecReq_W
Sensor signal	i_{aux}	A	Auxiliary system current	aux_iAct_A
Elec in [V]	u	V	Voltage	phys_voltage_V
Elec fb out [A]	i_{aux}	A	Current	phys_current_A

A.9.7.2.2. Mechanical auxiliary model

The mechanical auxiliary system shall be modelled using a controllable power loss, $P_{mech,aux}$. The power loss shall be implemented as a torque loss acting on the representative shaft.

$$M_{mech,aux} = P_{mech,aux}/\omega \quad (140)$$

Where:

$P_{mech,aux}$ is the mechanical auxiliary power demand, W

ω is the shaft rotational speed, rad/s

$M_{mech,aux}$ is the auxiliary torque, Nm

An auxiliary inertia load J_{aux} shall be part of the model and affect the powertrain inertia.

For the model as available in the standardized HILS library, the model parameter and interfacing definition is given in Table 20.

Table 20
Mechanical auxiliary model parameters and interface

Type / Bus	*Name*	*Unit*	*Description*	*Reference*
Parameter	J_{aux}	kgm^2	Inertia	dat.inertia.value
Command signal	$P_{mech,aux}$	W	Control signal for auxiliary system power demand	aux_pwrMechReq_W
Sensor signal	M_{aux}	Nm	Auxiliary system torque output	aux_tqAct_A
Mech out [Nm]	M_{aux}	Nm	Torque	phys_torque_Nm
	J_{aux}	kgm^2	Inertia	phys_inertia_kgm2
Mech fb in [rad/s]	ω	rad/s	Speed	phys_speed_radps

Table 21
Mechanical auxiliary model parameters

Parameter	*Specification*	*Reference paragraph*
J_{aux}	Manufacturer	-

A.9.7.3. Chassis model

A basic model of the chassis (the vehicle) shall be represented as an inertia. The model shall compute the vehicle speed from a propeller shaft torque and brake torque. The model shall include rolling and aerodynamic drag resistances and take into account the road slope resistance. A schematic diagram is shown in Figure 29.

Figure 29
Chassis (vehicle) model diagram

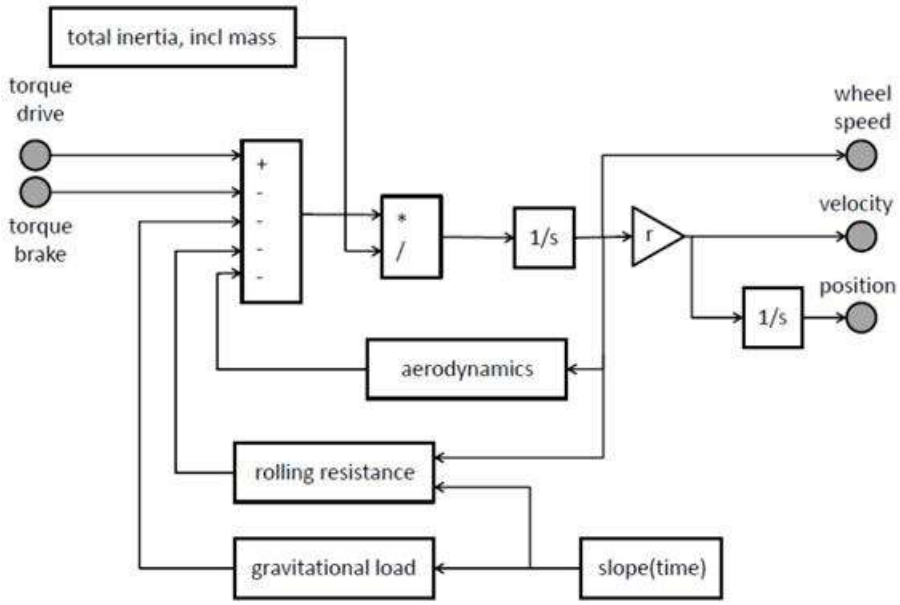

The drive torque M_{drive} shall be counteracted by the friction brake torque M_{fric_brake}. The brake torque actuator shall be modelled as a first order system as follows:

$$\dot{M}_{\text{fric_brake}} = -\frac{1}{\tau_1}(M_{\text{fric_brake}} - M_{\text{fric_brake,des}}) \quad (141)$$

Where:

$\dot{M}_{\text{fric_brake}}$ is the friction brake torque, Nm

$M_{\text{fric_brake,des}}$ is the desired friction brake torque, Nm

τ_1 is the friction brake actuator time response constant, s

The total drive torque shall balance with the torques for aerodynamic drag M_{aero}, rolling resistance M_{roll} and gravitation M_{grav} to find the resulting acceleration torque in accordance with following differential equation:

$$J_{\text{tot}}\,\dot{\omega}_{\text{wheel}} = M_{\text{drive}} - M_{\text{fric_brake}} - M_{\text{aero}} - M_{\text{roll}} - M_{\text{grav}} \quad (142)$$

Where:

J_{tot} is the total inertia of the vehicle, kgm^2

$\dot{\omega}_{\text{wheel}}$ is the wheel rotational acceleration, rad/s^2

The total inertia of the vehicle J_{tot} shall be calculated using the vehicle mass $m_{vehicle}$ and the inertias from the powertrain components as:

$$J_{tot} = m_{\text{vehicle}} \times r_{\text{wheel}}^2 + J_{\text{powertrain}} + J_{\text{wheel}} \quad (143)$$

Where:

m_{vehicle} is the mass of the vehicle, kg

$J_{powertrain}$ is the sum of all powertrain inertias, kgm^2

J_{wheel} is the inertia of the wheels, kg/m^2

r_{wheel} is the wheel radius, m

The vehicle speed $v_{vehicle}$ shall be determined from the wheel speed ω_{wheel} and wheel radius r_{wheel} as:

$$v_{vehicle} = \omega_{wheel} \times r_{wheel} \quad (144)$$

The aerodynamic resistance torque shall be calculated as:

$$M_{aero} = 0.5 \times \rho_a \times C_{drag} \times A_{front} \times v_{vehicle}^2 \times r_{wheel} \quad (145)$$

Where:

ρ_a is the air density, kg/m^3

C_{drag} is the air drag coefficient

A_{front} is the total vehicle frontal area, m^2

$v_{vehicle}$ is the vehicle speed, m/s

The rolling resistance and gravitational torque shall be calculated as follows:

$$M_{roll} = f_{roll} \times m_{vehicle} \times g \times cos(\alpha_{road}) \times r_{wheel} \quad (146)$$

$$M_{grav} = m_{vehicle} \times g \times \sin(\alpha_{road}) \times r_{wheel} \quad (147)$$

Where:

f_{roll} is the friction factor for wheel-road contact

g is the standard earth gravitation, m/s^2

α_{road} is the road slope, rad

The positive hybrid system work shall be determined by integration of the chassis model outputs as:

$$W_{sys} = \int_o^T max(0, M_{drive}) \times \omega_{wheel} dt \quad (148)$$

For the model as available in the standardized HILS library, the model parameter and interfacing definition is given in Table 22.

Table 22
Chassis model parameters and interface

Type / Bus	*Name*	*Unit*	*Description*	*Reference*
Parameter	$m_{vehicle}$	kg	Vehicle mass	dat.vehicle.mass.value
	A_{front}	m^2	Vehicle frontal area	dat.aero.af.value
	C_{drag}	-	Air drag coefficient	dat.aero.cd.value
	r_{wheel}	m	Wheel radius	dat.wheel.radius.value
	J_{wheel}	kgm^2	Wheel inertia	dat.wheel.inertia.value
	f_{roll}	-	Rolling resistance coefficient	dat.wheel.rollingres. value
	τ_1		Brake actuator time constant	dat.brakeactuator. timeconstant.value
Command signal	M_{brake}	Nm	Requested brake torque	chassis_tqBrakeReq_Nm

Type / Bus	*Name*	*Unit*	*Description*	*Reference*
Sensor signal	$v_{vehicle}$	m/s	Actual vehicle speed	chassis_vVehAct_mps
	ω_{wheel}	rad/s	Actual wheel speed	chassis_nWheelAct_radps
	m_{tot}	kg	Vehicle mass	chassis_massVehAct_kg
	M_{drive}	Nm	Actual wheel hub torque	chassis_tqSysAct_Nm
	α_{road}	rad	Road slope	chassis_slopRoad_rad
Mech in [Nm]	M_{drive}	Nm	Torque	phys_torque_Nm
	$J_{powertrain}$	kgm^2	Inertia	phys_inertia_kgm2
Mech fb out [rad/s]	ω_{wheel}	rad/s	Rotational speed	phys_speed_radps

Table 23
Chassis model parameters

Parameter	*Specification*	*Reference paragraph*
$m_{vehicle}$	Regulated	A.9.5.4.2.2.2., A.9.5.6.6., A.9.6.2.6., A.10.5.2.1.
A_{front}	Regulated	A.9.5.4.2.2.3., A.9.5.6.7., A.9.6.2.7., A.10.5.2.2.
C_{drag}	Regulated	A.9.5.4.2.2.3., A.9.5.6.7., A.9.6.2.7., A.10.5.2.2.
r_{wheel}	Regulated	A.9.5.6.9., A.9.6.2.9., A.10.5.2.4.
J_{wheel}	Regulated	A.9.5.6.5., A.9.6.2.7., A.10.5.2.12.
f_{roll}	Regulated	A9.5.4.2.2.4., A.9.5.6.8., A.9.6.2.8., A.10.5.2.3.
τ_1	Tuneable	default: 0.1 second

A.9.7.4. Driver models

The driver model shall actuate the accelerator and brake pedal to realize the desired vehicle speed cycle and apply the shift control for manual transmissions through clutch and gear control. Three different models are available in the standardized HILS library.

A.9.7.4.1. Driver output using recorded test data

Recorded driver output data from actual powertrain tests may be used to run the vehicle model in open loop mode. The data for the accelerator pedal, the brake pedal and, in case a vehicle with a manual shift transmission is represented, the clutch pedal and gear position shall therefore be provided in a dataset as a function of time.

For the model as available in the standardized HILS library, the model parameter and interfacing definition is given in Table 24.

Table 24
Driver model parameters and interface

Type / Bus	*Name*	*Unit*	*Description*	*Reference*
Command signal	$pedal_{brake}$	0-1	Requested brake pedal position	Drv_BrkPedl_Rt
	$pedal_{accelerator}$	0-1	Requested accelerator pedal position	Drv_AccPedl_Rt
	$pedal_{clutch}$	0-1	Requested clutch pedal position	Drv_CluPedl_Rt
	-	-	Gear request	Drv_nrGearReq

A.9.7.4.2. Driver model for vehicles without a shift transmission or equipped with automatic or automated manual transmissions

The driver model is represented by a commonly known PID-controller. The model output is depending on the difference between the reference target speed from the test cycle and the actual vehicle speed feedback. For vehicle speeds below the desired speed the accelerator pedal is actuated to reduce the deviation, for vehicle speeds greater than the desired speed the brake pedal is actuated. An anti-windup function is included for vehicles not capable of running the desired speed (e.g. their design speed is lower than the demanded speed) to prevent the integrator windup. When the reference speed is zero the model always applies the brake pedal to prevent moving of the vehicle due to gravitational loads.

For the model as available in the standardized HILS library, the model parameter and interfacing definition is given in Table 25.

Table 25
Driver model parameters and interface

Type / Bus	*Name*	*Unit*	*Description*	*Reference*
Parameter	K_P K_I K_D	- - -	PID controller parameters	dat.controller.p.value dat.controller.i.value dat.controller.d.value
	K_K	-	Anti-windup term	dat.controller.k.value
Command signal	$pedal_{brake}$	0-1	Requested brake pedal position	Drv_BrkPedl_Rt
	$pedal_{accelerator}$	0-1	Requested accelerator pedal position	Drv_AccPedl_Rt
	-	m/s	Reference target speed	Drivecycle_RefSpeed_mps
Sensor signal	$v_{vehicle}$	m/s	Actual vehicle speed	Chassis_vVehAct_mps

Table 26
Driver model parameters

Parameter	*Specification*	*Reference paragraph*
K_P, K_I, K_D	Tuneable	-
K_K	Tuneable	-

A.9.7.4.3. Driver model for vehicles equipped with manual transmission

The driver model consist of a PID-controller as described in paragraph A.9.7.4.2, a clutch actuation module and a gearshift logics as described in paragraph A.9.7.4.3.1. The gear shift logics module requests a gear change depending on the actual vehicle running condition. This induces a release of the accelerator pedal and simultaneously actuates the clutch pedal. The accelerator pedal is fully released until the drivetrain is synchronized in the next gear, but at least for the specified clutch time. Clutch pedal actuation of the driver (opening and closing) is modelled using a first order transfer function. For starting from standstill, a linear clutch behaviour is realized and can be parameterized separately (see Figure 30).

Figure 30
Clutch pedal operation (example)

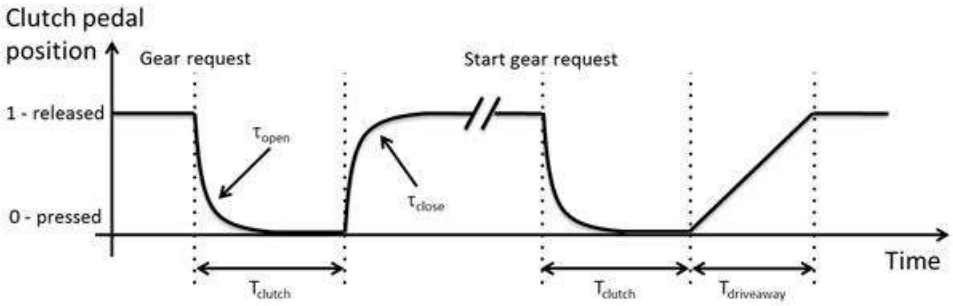

For the model as available in the standardized HILS library, the model parameter and interfacing definition is given in Table 27.

Table 27
Driver model parameters and interface

Type / Bus	*Name*	*Unit*	*Description*	*Reference*
Parameter	K_P K_I K_D	- - -	PID controller parameters	dat.controller.p.value dat.controller.i.value dat.controller.d.value
	K_K	-	Anti-windup term	dat.controller.k.value
	T_{clutch}	s	Specified clutch time	dat.clutchtime.value
	τ_{open}	s	Opening time constant	dat.clutchtime.open.value
	τ_{close}	s	Closing time constant	dat.clutchtime.close.value
	$T_{driveaway}$	s	Closing time at drive away	dat.clutchtime.driveaway. value
Command signal	$pedal_{brake}$	0-1	Requested brake pedal position	Drv_BrkPedl_Rt
	$pedal_{accelerator}$	0-1	Requested accelerator pedal position	Drv_AccPedl_Rt
	-	m/s	Reference target speed	Drivecycle_RefSpeed_mps
	-	-	Gear request	Drv_nrGearReq
	$pedal_{clutch}$	0-1	Requested clutch pedal position	Drv_CluPedl_Rt
Sensor signal	$v_{vehicle}$	m/s	Actual vehicle speed	Chassis_vVehAct_mps
	ω_{in}	rad/s	Transmission input speed	Transm_nInAct_radps
	-	-	Actual gear engaged	Transm_nrGearAct
	-	Boolean	Clutch disengaged or not	Clu_flgConnected_B

Table 28
Driver model parameters

Parameter	*Specification*	*Reference paragraph*
K_P, K_I, K_D	Tuneable	-
K_K	Tuneable	-
T_{clutch}	Regulated	A.9.5.6.12., A.9.6.2.14., A.10.5.2.9.
τ_{open}	Tuneable	Default: 0.01
τ_{close}	Tuneable	Default: 0.02
$T_{driveaway}$	Tuneable	Default: 2

A.9.7.4.3.1. Gear shift strategy for manual transmissions

The gear shift strategy for a (manual) shift transmission is available as a separate component module and therefore can be integrated in other driver models different from the one as described in paragraph A.9.7.4.3. Besides the specified parameters below, the gear shift strategy also depends on vehicle and driver parameters which have to be set in the parameter file in accordance with the respective component data as specified in Table 30.

The implemented gearshift strategy is based on the definition of shifting thresholds as function of engine speed and torque for up- and down shift manoeuvres. Together with a full load torque curve and a friction torque curve, they describe the permitted operating range of the system. Crossing the upper shifting limit forces selection of a higher gear, crossing the lower one will request the selection of a lower gear (see Figure 31 below).

Figure 31
Gear shift logic (example)

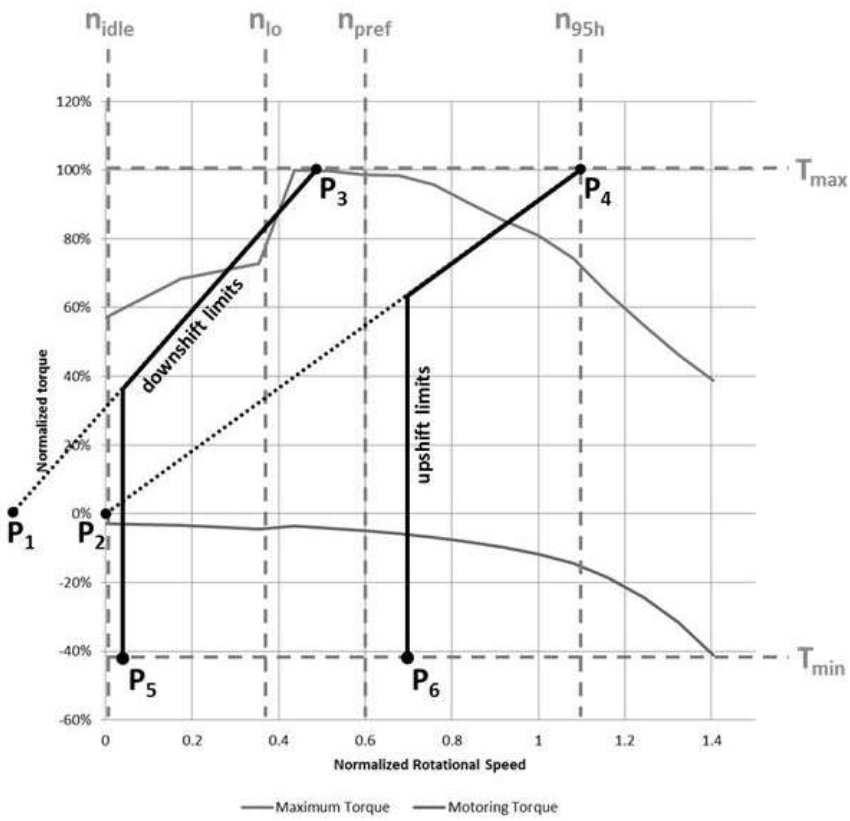

The values for the shifting thresholds specified in Table 29 shall be calculated based on the data of the internal combustion engine full load torque curve and friction torque curve (as obtained in accordance with paragraph A.9.8.3.) as follows:

(a) The characteristic points P_1 to P_6 in Figure 31 are defined by the coordinate pairs listed in Table 29.

(b) The slope k_1 of the line between P_1 and P_3 as well as the slope k_2 of the line between P_2 and P_4 are calculated as follows:

$$k_1 = \frac{y_3 - y_1}{x_3 - x_1} \tag{149}$$

$$k_2 = \frac{y_4 - y_2}{x_4 - x_2} \tag{150}$$

(c) The downshift limits speed vector shall consist of the three values: $[x_5, \quad x_5, \quad x_3]$

(d) The downshift limits torque vector shall consist of the three values:

$$\left[y_5 \,,\ k_1 \times (x_5 - \frac{n_{\text{idle}}}{2}), \quad y_3 \right]$$

(e) The upshift limits speed vector shall consist of the three values:

$[x_6, \quad x_6, \quad x_4]$

(f) The upshift limits torque vector shall consist of the three values:

$$\lfloor y_6 \,,\ k_2 \times (x_6 - n_{\text{idle}}), \quad y_4 \rfloor$$

Table 29
Shift logic coordinate pairs

Point	*x-coordinate (engine speed, min^{-1})*	*y-coordinate (engine torque, Nm)*
P_1	$x_1 = \frac{n_{\text{idle}}}{2}$	$y_1 = 0$
P_2	$x_2 = n_{\text{idle}}$	$y_2 = 0$
P_3	$x_3 = \frac{n_{lo} + n_{\text{pref}}}{2}$	$y_3 = T_{\max}$
P_4	$x_4 = n_{95\text{h}}$	$y_4 = T_{\max}$
P_5	$x_5 = 0.85 \times n_{\text{idle}} + 0.15 \times n_{\text{lo}}$	$y_5 = T_{\min}$
P_6	$x_6 = 0.80 \times n_{\text{pref}} + 0.20 \times n_{95\text{h}}$	$y_6 = T_{\min}$

Where in the above:

$T_{\max}$ is the overall maximum positive engine torque, Nm

$T_{\min}$ is the overall minimum negative engine torque, Nm

n_{idle}, n_{lo}, n_{pref}, $n_{95\text{h}}$ are the reference speeds as defined in accordance with paragraph 7.4.6., min^{-1}

Also the driving cycle and the time of clutch actuation during a shift manoeuvre (T_{clutch}) are loaded in order to detect vehicle starts from standstill and engage the start gear in time ($T_{startgear}$) before the reference driving cycle speed changes from zero speed to a value above zero. This allows the vehicle to follow the desired speed within the given limits.

The standard output value of the gearshift module when the vehicle is at standstill is the neutral gear.

After a gear change is requested, a subsequent gear change request is suppressed for a period of 3 seconds and as long as the drivetrain is not connected to all propulsion machines and not fully synchronized again ($Dt_{syncindi}$). These limiting conditions are rejected and a next gear change is forced when certain defined limits for the gearbox input speed (lower than ICE idle speed or higher than ICE normalized speed of 1.2 (i.e. 1.2 x (rated speed – idle speed) + idle speed)) are exceeded.

After a gear change is finished, the friction clutch actuated by the driver has to be fully connected again. This is particularly important during decelerations of the vehicle. If a deceleration occurs from a certain speed down to standstill, the friction clutch actuated by the driver has to be connected again after each downshift. Otherwise, the gear shift algorithm will not work properly and the simulation will result in an internal error. If shifting down one gear after the other (until the neutral gear is selected) during braking with very high decelerations shall be avoided, the friction clutch actuated by the driver has to be fully disconnected during the entire deceleration until the vehicle is standing still. Once the vehicle speed is zero the neutral gear will be selected and the friction clutch actuated by the driver can be connected again allowing the vehicle to start from standstill as soon as the driving cycle demands so.

If the accelerator pedal is fully pressed, the upper shifting limit is not in force. In this case, the upshift is triggered when the gearbox input speed gets higher than the ICE rated speed (i.e. when the point of maximum power is exceeded).

A skip gear function for upshifting can be enabled (SG_{flg}) for transmissions with a high number of gears to avoid unrealistic, too frequent shift behaviour. In this case, the highest gear for which the gearbox input speed is located above the downshift limit and below the upshift limit for the actual operation point is selected.

Automatic start gear detection is also available (ASG_{flg}) for transmissions with a high number of gears to avoid unrealistic, too frequent shift behaviour. If activated, the highest gear for which the gearbox input speed is above ICE idle speed when the vehicle is driving at 2 m/s and for which a vehicle acceleration of 1.6 m/s² can be achieved is selected for starting from standstill. If deactivated, starting from standstill is performed in the first (1st) gear.

The flag signal $Dt_{syncindi}$ is used as an indicator for a fully synchronized and connected drivetrain. It is involved in triggering upcoming gear shift events. It has to be ensured that this signal becomes active only if the entire drivetrain runs on fully synchronized speeds. Otherwise the gear shift algorithm will not work properly and the simulation will result in an internal error.

For a correct engagement of the starting gear, the actual vehicle speed has to be zero (no rolling of the vehicle, application of brake necessary). Otherwise a time delay can occur until the starting gear is engaged.

For the model as available in the standardized HILS library, the model parameter and interfacing definition is given in Table 30, where "satp" is used for "set in accordance with respective parameter file and provisions of". Additional explanations are listed below the table for all descriptions marked with an asterisk (*).

Table 30
Gear shift strategy parameters and interface

Type / Bus	*Name*	*Unit*	*Description*	*Reference*
Parameter	T_{clutch}	s	satp driver	dat.vecto.clutchtime.value
	-	kg	satp chassis	dat.vecto.vehicle.mass.value
	-	m		dat.vecto.wheel.radius.value
	-	kgm^2		dat.vecto.wheel.inertia.value
	-	-		dat.vecto.wheel.rollingres. value
	-	m^2		dat.vecto.aero.af.value
	-	-		dat.vecto.aero.cd.value
	-	-	satp final gear	dat.vecto.fg.ratio.value
	-	-	satp transmission*[1]	dat.vecto.gear.number.vec
	-	-		dat.vecto.gear.ratio.vec
	-	-		dat.vecto.gear.efficiency.vec
	-	rad/s	satp engine*[2]*[3]*[4]	dat.vecto.ICE. maxtorque_speed.vec
	-	Nm		dat.vecto.ICE. maxtorque_torque.vec
	-	Nm		dat.vecto.ICE. maxtorque_friction.vec
	-	rad/s		dat.vecto.ICE.ratedspeed. value
	-	rad/s	downshift limits speed vector	dat.vecto.downshift_speed. vec
	-	Nm	downshift limits torque vector	dat.vecto.downshift_torque. vec
	-	rad/s	upshift limits speed vector	dat.vecto.upshift_speed. vec
	-	Nm	upshift limits torque vector	dat.vecto.upshift_torque. vec
	SG_{flg}	Boolean	skip gears when upshifting active or not Default: 0	dat.vecto.skipgears.value
	$T_{startgear}$	s	engage startgear prior driveaway	dat.vecto.startgearengaged. value

Type / Bus	*Name*	*Unit*	*Description*	*Reference*
	ASG_{flg}	Boolean	automatic start gear detection active or not Default: 0	dat.vecto.startgearactive.value
Command signal	-	-	Requested gear	nrGearReq
Sensor signal	$v_{vehicle}$	m/s	Actual vehicle speed	Chassis_vVehAct_mps
	ω_{in}	rad/s	Transmission input speed	Transm_nInAct_radps
	-	-	Actual gear engaged	Transm_nrGearAct
	$Dt_{syncindi}$	Boolean	Clutch disengaged or not and drivetrain synchronized or not	Clu_flgConnected_B
	-	-	Actual position of accelerator pedal	Drv_AccPedl_rat

*[1] The efficiencies of each gear of the transmission do not require a map, but only a single value for each gear since constant efficiencies are defined for the creation of the HEC cycle (in accordance with paragraph A.9.6.2.11.). The gear shift logics for manual transmissions shall not be used for model verification (in accordance with paragraph A.9.5.6.14.). and thus do not require an efficiency map for each gear since in this case the gear shifting behaviour from the actual powertrain test is fed into the model.

*[2] The vector of engine speed setpoints defining the full load and friction torque curve has to start with engine idle speed. Otherwise the gear shift algorithm will not work properly.

*[3] The vector defining the engine friction torque curve has to consist of values of negative torque (in accordance with paragraph A.9.8.3.).

*[4] The engine rated speed value used for parameterizing the gear shift logics for manual transmissions shall be the highest engine speed where maximum power is available. Otherwise the gear shift algorithm will not work properly.

A.9.7.5. Electrical component models

A.9.7.5.1. DC/DC converter model

The DC/DC converter is a device that converts the voltage level to the desired voltage level. The converter model is generally representative and captures the behaviour of several different converters such as buck, boost and buck-boost converters. As DC/DC converters are dynamically fast compared to other dynamics in a powertrain, a simple static model shall be used:

$$u_{out} = x_{DCDC} \times u_{in} \tag{151}$$

Where:

u_{in} is the input voltage level, V

u_{out} is the output voltage level, V

x_{DCDC} is the conversion ratio, i.e. control signal

The conversion ratio x_{DCDC} shall be determined by an open-loop controller to the desired voltage u_{req} as:

$$x_{DCDC} = u_{req} / u_{in} \quad (152)$$

The DC/DC converter losses shall be defined as current loss using an efficiency map in accordance with:

$$i_{in} = x_{DCDC} \times i_{out} \times \eta_{DCDC}(u_{in}, i_{in}) \quad (153)$$

Where:

η_{DCDC} is the DC/DC converter efficiency

i_{in} is the input current to the DC/DC converter, A

i_{out} is the output current from the DC/DC converter, A

For the model as available in the standardized HILS library, the model parameter and interfacing definition is given in Table 31.

Table 31
DC/DC converter model parameters and interface

Type / Bus	*Name*	*Unit*	*Description*	*Reference*
Parameter	η_{DCDC}	-	Efficiency	dat.elecefficiency.efficiency.map
Command signal	u_{req}	V	Requested output voltage	dcdc_uReq_V
Sensor signal	u_{out}	V	Actual output voltage	dcdc_uAct_V
Elec in [V]	u_{in}	V	Voltage	phys_voltage_V
Elec out [V]	u_{out}	V	Voltage	phys_voltage_V
Elec fb in [A]	i_{out}	A	Current	phys_current_A
Elec fb out [A]	i_{in}	A	Current	phys_current_A

Table 32
DC/DC converter model parameters

Parameter	*Specification*	*Reference paragraph*
η_{DCDC}	Manufacturer	-

A.9.7.6. Energy converter models

A.9.7.6.1. Electric machine system model

An electric machine can generally be divided into three parts, the stator, rotor and the power electronics. The rotor is the rotating part of the machine. The electric machine shall be modelled using maps to represent the relation between its mechanical and electrical (DC) power, see Figure 32.

Figure 32
Electric machine model diagram

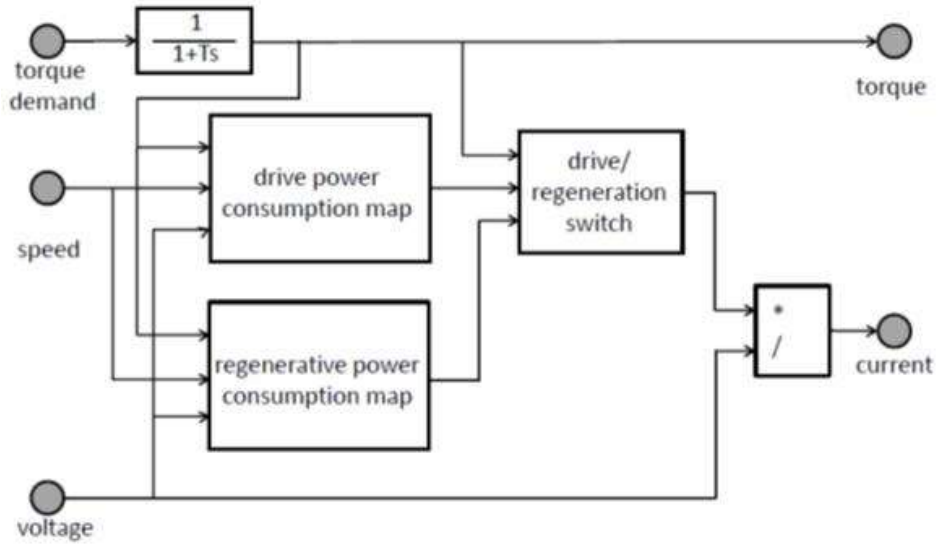

The electric machine dynamics shall be modelled as a first order system

$$\dot{M}_{\text{em}} = -\frac{1}{\tau_1} \times (M_{\text{em}} - M_{\text{em,des}}) \tag{154}$$

Where:

$\dot{M}_{\text{em}}$ is the electric machine torque, Nm

$M_{\text{em,des}}$ is the desired electric machine torque, Nm

τ_1 is the electric machine time response constant

The electric machine system power $P_{\text{el,em}}$ shall be mapped as function of the electric motor speed ω_{em} , its torque M_{em} and DC-bus voltage level u. Two separate maps shall be defined for the positive and negative torque ranges, respectively.

$$P_{\text{el,em}} = f\ (M_{\text{em}}, \omega_{\text{em}}, u) \tag{155}$$

The efficiency of the electric machine system shall be calculated as:

$$\eta_{\text{em}} = \frac{M_{\text{em}} \times \omega_{\text{em}}}{P_{\text{el,em}}} \tag{156}$$

The electric machine system current i_{em} shall be calculated as:

$$i_{\text{em}} = \frac{P_{\text{el,em}}}{u} \tag{157}$$

Based on its power loss $P_{\text{loss,em}}$, the electric machine model provides a simple thermodynamics model that may be used to derive its temperature T_{em} as follows:

$$P_{\text{loss,em}} = P_{\text{el,em}} - M_{\text{em}} \times \omega_{\text{em}} \tag{158}$$

$$\dot{T}_{\text{em}} = \frac{1}{\tau_{\text{em,heat}}} \times (P_{\text{loss,em}} - (T_{\text{em}} - T_{\text{em,cool}}) / R_{\text{em,th}}) \quad (159)$$

Where:

$\dot{T}_{\text{em}}$ is the electric machine system temperature, K

$\tau_{\text{em,heat}}$ is the thermal capacity for electric machine thermal mass, J/K

$T_{\text{em,cool}}$ is the electric machine system cooling medium temperature, K

$R_{\text{em,th}}$ is the thermal resistance between electric machine and its cooling medium, K/W

The electric machine system shall be torque or speed controlled using, respectively, an open-loop (feed-forward) controller or PI-controller as follows:

$$M_{\text{em,des}} = K_{\text{p}} \times (\omega_{\text{ref}} - \omega_{\text{em}}) + K_1 \times \int (\omega_{\text{ref}} - \omega_{\text{em}}) dt \quad (160)$$

Where:

K_P is the proportional gain of speed controller

K_I is the integral gain of speed controller

The electric machine torque shall be limited as follows:

$$M_{min}(\omega_{\text{em}}) \le M_{\text{em,des}} \le M_{max}(\omega_{\text{em}}) \quad (161)$$

Where:

M_{min}, M_{max} are the minimum and maximum torque maps as function of the rotational speed, Nm

The electric machine model shall also include an inertia load J_{em} that shall be added to the total powertrain inertia.

For the model as available in the standardized HILS library, the model parameter and interfacing definition is given in Table 33.

Table 33
Electric machine model parameters and interface

Type / Bus	*Name*	*Unit*	*Description*	*Reference*
Parameter	J_{em}	kgm^2	Inertia	dat.inertia.value
	τ_1	s	Time constant	dat.timeconstant.value
	M_{max}	Nm	Maximum torque =f(speed)	dat.maxtorque.torque.vec
	M_{min}	Nm	Minimum torque =f(speed)	dat.mintorque.torque.vec
	K_P K_I	- -	Speed controller (PI)	dat.controller.p.value dat.controller.p.value
	$P_{\text{el,em}}$	W	Power map =f(speed,torque,voltage)	dat.elecpowmap.motor.elecpowmap dat.elecpowmap.generator.elecpowmap
Optional parameters	$\tau_{\text{em,heat}}$	J/K	Thermal capacity	dat.cm.value
	R_{th}	K/W	Thermal resistance	dat.Rth.value

Type / Bus	*Name*	*Unit*	*Description*	*Reference*
	-	-	Properties of the cooling fluid	dat.coolingFluid
Command signal	ω_{ref}	rad/s	Requested speed	ElecMac_nReq_radps
	-	boolean	Switch speed/torque control	ElecMac_flgReqSwitch_B
	$M_{em,des}$	Nm	Requested torque	ElecMac_tqReq_Nm
Sensor signal	M_{em}	Nm	Actual machine torque	ElecMac_tqAct_Nm
	ω_{em}	rad/s	Actual machine speed	ElecMac_nAct_radps
	i	A	Current	ElecMac_iAct_A
	T_{em}	K	Machine temperature	ElecMac_tAct_K
Elec in [V]	u	V	voltage	phys_voltage_V
Elec fb out [A]	i	A	current	phys_current_A
Mech out [Nm]	M_{em}	Nm	torque	phys_torque_Nm
	J_{em}	kgm^2	inertia	phys_inertia_kgm2
Mech fb in [rad/s]	ω_{em}	rad/s	rotational speed	phys_speed_radps

Table 34
Electric machine model parameters

Parameter	*Specification*	*Reference paragraph*
J_{em}	Manufacturer	-
τ_1	Tuneable	-
M_{max}	Regulated	A.9.8.4.
M_{min}	Regulated	A.9.8.4.
K_P, K_I	Tuneable	-
$P_{el,em}$	Regulated	A.9.8.4.

A.9.7.6.2. Hydraulic pump/motor model

A hydraulic pump/motor generally converts energy stored in a hydraulic accumulator to mechanical energy as schematically shown in Figure 33.

Figure 33
Hydraulic pump/motor model diagram

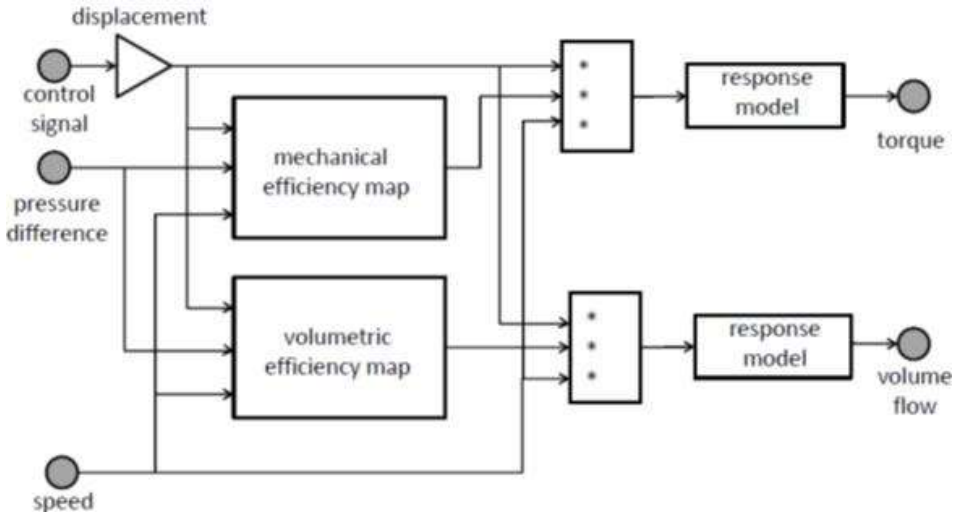

The pump/motor torque shall be modelled as:

$$M_{pm} = x \times D_{pm} \times (p_{acc} - p_{res}) \times \eta_{pm} \quad (162)$$

Where:

M_{pm} is the pump/motor torque, Nm

x is the pump/motor control command signal between 0 and 1

D_{pm} is the pump/motor displacement, m^3

p_{acc} is the pressure in high pressure accumulator, Pa

p_{res} is the pressure in low pressure sump/reservoir, Pa

η_{pm} is the mechanical pump/motor efficiency

The mechanical efficiency shall be determined from measurements and mapped as function of the control command signal x, the pressure difference over the pump/motor and its speed as follows:

$$\eta_{pm} = f(\dot{x}, p_{acc}, p_{res}, \omega_{pm}) \quad (163)$$

Where:

ω_{pm} is the pump/motor speed, rad/s

The volumetric flow Q_{pm} through the pump/motor shall be calculated as:

$$Q_{pm} = x \times D_{pm} \times \omega_{pm} \times \eta_{vpm} \quad (164)$$

The volumetric efficiency shall be determined from measurements and mapped as function of the control command signal x, the pressure difference over the pump/motor and its speed as follows:

$$\eta_{vpm} = f\left(x, p_{acc}, p_{res}, \omega_{pm}\right) \quad (165)$$

The hydraulic pump/motor dynamics shall be modelled as a first order system in accordance with:

$$\dot{x}_{\mathrm{pm}} = -\frac{1}{\tau_1} \times \left(x_{\mathrm{pm}} - u_{\mathrm{pm,des}} \right) \tag{166}$$

Where:

$\dot{x}_{\mathrm{pm}}$ is the output pump/motor torque or volume flow, Nm or m^3/s

$u_{\mathrm{pm,des}}$ is the input pump/motor torque or volume flow, Nm or m^3/s

τ_1 is the pump/motor time response constant, s

The pump/motor system shall be torque or speed controlled using, respectively, an open-loop (feed-forward) control or PI-controller as follows:

$$M_{\mathrm{pm,des}} = K_{\mathrm{p}} \times (\omega_{\mathrm{ref}} - \omega_{\mathrm{pm}}) + K_1 \times \int (\omega_{\mathrm{ref}} - \omega_{\mathrm{pm}}) dt \tag{167}$$

Where:

K_P is the proportional gain of speed controller

K_I is the integral gain of speed controller

The hydraulic pump/motor torque shall be limited as follows:

$$M_{\mathrm{pm,des}} \leq M_{\mathrm{max}}(\omega_{\mathrm{pm}}) \tag{168}$$

Where:

M_{max} is the maximum torque map as function of the rotational speed, Nm

The hydraulic pump/motor model shall also include an inertia load J_{pm} that shall be added to the total powertrain inertia.

For the model as available in the standardized HILS library, the model parameter and interfacing definition is given in Table 35.

Table 35
Hydraulic Pump/Motor model parameters and interface

Type / Bus	*Name*	*Unit*	*Description*	*Reference*
Parameter	J_{pm}	kgm^2	Inertia	dat.inertia.value
	τ_1	s	Time constant	dat.timeconstant.value
	M_{max}	Nm	Maximum torque =f(speed)	dat.maxtorque
	D	m^3	Displacement volume	dat.displacement.value
	η_{v}	-	Volumetric efficiency	dat.volefficiency.efficiency.map
	η_{m}	-	Mechanical efficiency	dat.mechefficiency.efficiency.map
	K_P K_I	- -	PI controller	dat.controller.p.value dat.controller.i.value
Command signal	ω_{ref}	rad/s	Requested speed	Hpm_nReq_radps
	-	boolean	Switch speed/torque control	Hpm_flgReqSwitch_B
	$M_{\mathrm{pm,des}}$	Nm	Requested torque	Hpm_tqReq_Nm

Type / Bus	*Name*	*Unit*	*Description*	*Reference*
Sensor signal	M_{pm}	Nm	Actual machine torque	Hpm_tqAct_Nm
	ω_{pm}	rad/s	Actual machine speed	Hpm_nAct_radps
	Q_{pm}	m^3/s	Actual volumetric flow	Hpm_flowAct_m3ps
	p_{acc}	Pa	Accumulator pressure	Hpm_pInAct_Pa
	p_{res}	Pa	Reservoir pressure	Hpm_pOutAct_Pa
Fluid in 1 [Pa]	p_{acc}	Pa	pressure	phys_pressure_Pa
Fluid in 2 [Pa]	P_{res}	Pa	pressure	phys_pressure_Pa
Fluid out [m3/s]	Q_{pm}	m^3/s	Volume flow	phys_flow_m3ps
Mech out [Nm]	M_{pm}	Nm	torque	phys_torque_Nm
	J_{pm}	kgm^2	inertia	phys_inertia_kgm2
Mech fb in [rad/s]	ω_{pm}	rad/s	rotational speed	phys_speed_radps

Table 36
Hydraulic pump/motor model parameters

Parameter	*Specification*	*Reference paragraph*
J_{pm}	Manufacturer	-
τ_1	Manufacturer	-
M_{max}	Manufacturer	-
D	Manufacturer	-
η_v	Manufacturer	-
η_m	Manufacturer	-
K_P, K_I	Tuneable	-

A.9.7.6.3. Internal combustion engine model

The internal combustion engine model shall be modelled using maps to represent the chemical to mechanical energy conversion and the applicable time response for torque build up. The internal combustion engine model diagram is shown in Figure 34.

Figure 34
Internal combustion engine model diagram

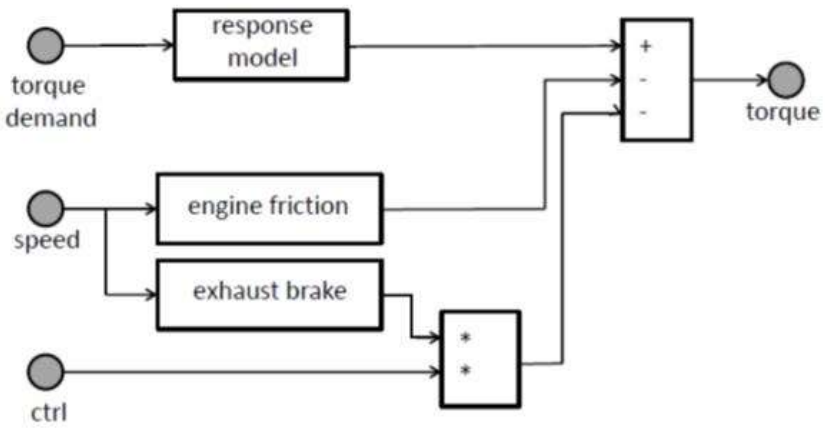

The internal combustion engine shall include engine friction and exhaust braking, both as function of engine speed and modelled using maps. The exhaust brake can be controlled using e.g. an on/off control command signal or continuous signal between 0 and 1. The model shall also include a starter motor, modelled using a constant torque M_{start}. The internal combustion engine shall be started and stopped by a control signal.

The torque build-up response model shall be modelled using two first order models. The first shall account for almost direct torque build-up representing the fast dynamics as follows:

$$\dot{M}_{ice,1} = -\frac{1}{\tau_{ice,1}} \times \left(M_{ice,1} - M_{ice,des1}(\omega_{ice})\right) \quad (169)$$

Where:

$\dot{M}_{ice,1}$ is the fast dynamic engine torque, Nm

$M_{ice,des1}$ is the fast dynamic engine torque demand, Nm

$\tau_{ice,1}$ is the time constant for fast engine torque response, s

ω_{ice} is the engine speed, rad/s

The second first-order system shall account for the slower dynamics corresponding to turbo charger effects and boost pressure build-up as follows:

$$\dot{M}_{ice,2} = -\frac{1}{\tau_{ice,2}(\omega_{ice})} \times \left(M_{ice,2} - M_{ice,des2}(\omega_{ice})\right) \quad (170)$$

Where:

$\dot{M}_{ice,2}$ is the slow dynamic engine torque, Nm

$M_{ice,des2}$ is the slow dynamic engine torque demand, Nm

$\tau_{ice,2}$ is the speed dependent time constant for slow engine torque response, s

Both the speed dependent time constant and the dynamic and direct torque division are mapped as function of speed.

The total engine torque M_{ice} shall be calculated as:

$$M_{ice} = M_{ice,1} + M_{ice,2} \quad (171)$$

The internal combustion engine model provides a thermodynamics model that may be used to represent the engine heat-up from cold start to its normal stabilized operating temperatures in accordance with:

$$T_{ice,oil} = \max\,(T_{ice,oil,heatup} = f\,(P_{ice,loss}),\ T_{ice,oil,hot}) \quad (172)$$

Where:

$T_{ice,oil}$ is the ICE oil temperature, K

$P_{ice,loss}$ are the ICE power losses, W

Since no fuel consumption nor efficiency map is available in the model $P_{ice,loss} = (\omega_{ice} \text{ x } M_{ice})$ is used as a simplified approach for loss estimation. Adaption of the warm-up behaviour can be made via the function $T_{ice,oil,heatup} = f(P_{ice,loss})$.

$T_{ice,oil,heatup}$ is the ICE oil temperature at (cold) start, K

$T_{ice,oil,hot}$ is the ICE oil temperature at normal warm-up operation condition, K

The internal combustion engine shall be torque or speed controlled using, respectively, an open-loop (feed-forward) control or PI-controller. For both controllers the desired engine torque can be either the desired indicated torque or the desired crankshaft torque. This shall be selected by the parameter $M_{des,type}$. The PI controller shall be in accordance with:

$$M_{ice,des} = K_p \times (\omega_{ref} - \omega_{ice}) + K_I \times \int (\omega_{ref} - \omega_{ice})dt \quad (173)$$

Where:

K_p is the proportional gain of speed controller

K_I is the integral gain of speed controller

The internal combustion engine torque shall be limited as follows:

$$M_{ice,des} \leq M_{max}(\omega_{ice}) \quad (174)$$

Where:

M_{max} is the maximum torque as function of the rotational speed, Nm

The internal combustion engine model shall also include an inertia load J_{ice} that shall be added to the total powertrain inertia.

The positive engine work shall be determined by integration of the engine model outputs as:

$$W_{ice_HILS} = \int_O^T \max(0, M_{ice}) \times \omega_{ice}\ dt \quad (175)$$

For the model as available in the standardized HILS library, the model parameter and interfacing definition is given in Table 37.

Table 37
Internal Combustion Engine model parameters and interface

Type / Bus	*Name*	*Unit*	*Description*	*Reference*
Parameter	J_{ice}	kgm^2	Inertia	dat.inertia.value
	$\tau_{ice,1}$	-	Time constant	dat.boost.insttorque. timeconstant.T1.value
	$\tau_{ice,2}$	-	Time constant = f(speed)	dat.boost.timeconstant.T2. value
	M_{fric}	Nm	Engine friction torque	dat.friction.friction.vec
	M_{exh}	Nm	Exhaust brake torque	dat.exhaustbrake.brake.vec
	M_{max}	Nm	Maximum torque =f(speed)	dat.maxtorque.torque.vec
	K_P K_I	- -	PI controller	dat.controller.p.value dat.controller.i.value
	M_{start}	Nm	Starter motor torque	dat.startertorque.value
	$M_{des,type}$	-	Desired torque type selector: (0) indicated (1) crankshaft	dat.torquereqtype.value
Optional parameters		-	Properties of oil	dat.oil
		-	Properties of coolant	dat.cf
Command signal	ω_{ref}	rad/s	Requested speed	Eng_nReq_radps
	-	boolean	Switch speed/torque control	Eng_flgReqSwitch_B
	$M_{ice,des}$	Nm	Requested torque	Eng_tqReq_Nm
		boolean	Exhaust brake on/off, continuous between 0-1	Eng_flgExhaustBrake_B
		boolean	Engine on or off	Eng_flgOnOff_B
		boolean	Starter motor on or off	Eng_flgStrtReq_B
		boolean	Fuel cut off	Eng_flgFuelCut_B
Sensor signal	M_{ice}	Nm	Crankshaft torque	Eng_tqCrkSftAct_Nm
	$M_{ice}+M_{fric}+M_{exh}$	Nm	Indicated torque	Eng_tqIndAct_Nm
	ω_{ice}	rad/s	Actual engine speed	Eng_nAct_radps
	T_{ice}	K	Oil temperature	Eng_tOilAct_K
Mech out [Nm]	M_{ice}	Nm	torque	phys_torque_Nm
	J_{ice}	kgm^2	inertia	phys_inertia_kgm2
Mech fb in [rad/s]	ω_{ice}	rad/s	rotational speed	phys_speed_radps

Table 38
Internal combustion engine model parameters

Parameter	*Specification*	*Reference paragraph*
J_{ice}	Manufacturer	-
$\tau_{ice,1}$	Regulated	A.9.8.3.
$\tau_{ice,2}$	Regulated	A.9.8.3.
M_{fric}	Regulated	A.9.8.3.
M_{exh}	Regulated	A.9.8.3.
M_{max}	Regulated	A.9.8.3.
K_P, K_I	Tuneable	-
M_{start}	Manufacturer	-
$M_{des,type}$	Manufacturer	-

A.9.7.7. Mechanical component models

A.9.7.7.1. Clutch model

The clutch model shall transfer the input torque on the primary clutch plate to the secondary clutch plate moving through three operating phases:

1) Opened,

2) Slipping and

3) Closed.

Figure 35 shows the clutch model diagram.

Figure 35
Clutch model diagram

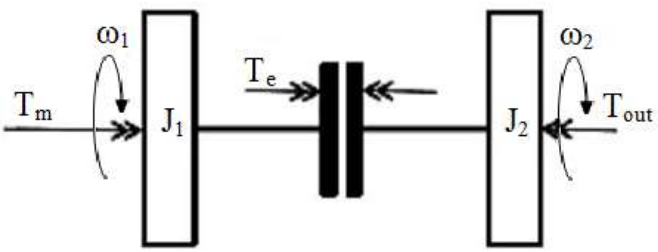

The clutch model shall be defined in accordance with following (differential) equations of motion:

$$J_{cl,1} \times \dot{\omega}_{cl,1} = M_{cl1,in} - M_{cl} \quad (176)$$

$$J_{cl,2} \times \dot{\omega}_{cl,2} = M_{cl} - M_{cl2,out} \quad (177)$$

During clutch slip operation following relation is defined:

$$M_{cl} = u_{cl} \times M_{cl,max\ torque} \times \tanh(c \times (\omega_1 - \omega_2)) \quad (178)$$

$$\omega_1 = \omega_2\big|_{t=0} + \int_0^t \left(M_{cl1,in}(t) - M_{cl}(t)\right) dt \quad (179)$$

Where:

$M_{cl,maxtorque}$ is the maximum torque transfer through the clutch, Nm

u_{cl} is the clutch actuation control signal between 0 and 1

c is a tuning constant for the hyperbolic function *tanh*(…).

When the speed difference between $\omega_1 - \omega_2$ is below the threshold limit $slip_{limit}$ and the clutch pedal position is above the threshold limit $pedal_{limit}$, the clutch shall no longer be slipping and considered to be in closed (locked) mode.

During clutch open and closed operation, the following relations shall apply:

(1) For clutch open:

$$M_{cl} = 0 \quad (180)$$

(2) For clutch closed:

$$M_{cl2,out} = M_{cl1,in} \quad (181)$$

The clutch pedal actuator shall be represented as a first order system:

$$\dot{u}_{cl} = -\frac{1}{\tau_1} \times (u_{cl} - u_{pedal}) \quad (182)$$

Where:

$\dot{u}_{cl}$ is the clutch actuator position between 0 and 1

u is the clutch pedal position between 0 and 1

τ_1 is the clutch time constant, s

For the model as available in the standardized HILS library, the model parameter and interfacing definition is given in Table 39.

Table 39
Clutch model parameters and interface

Type / Bus	*Name*	*Unit*	*Description*	*Reference*
Parameter	J_1	kgm^2	Inertia	dat.in.inertia.value
	J_2	kgm^2	Inertia	dat.out.inertia.value
	$M_{cl,maxtorque}$	Nm	Maximum clutch torque	dat.maxtorque.value
	c	-	Tuning constant	dat.tanh.value
	$slip_{limit}$	rad/s	Slipping clutch, relative speed limit	dat.speedtolerance.value
	$pedal_{limit}$	-	Slipping clutch, pedal limit	dat.clutchthreshold.value
	τ_1	s	Time constant clutch actuator	dat.actuator.timeconstant. value
Command signal	u	0-1	Requested clutch pedal position	Clu_ratReq_Rt
Sensor signal		boolean	Clutch disengaged or not	Clu_flgConnected_B
Mech in [Nm]	M_{in}	Nm	torque	phys_torque_Nm
	J_{in}	kgm^2	inertia	phys_inertia_kgm2

Type / Bus	*Name*	*Unit*	*Description*	*Reference*
Mech out [Nm]	M_{out}	Nm	torque	phys_torque_Nm
	J_{out}	kgm^2	inertia	phys_inertia_kgm2
Mech fb in [rad/s]	ω_1	rad/s	rotational speed	phys_speed_radps
Mech fb out [rad/s]	ω_2	rad/s	rotational speed	phys_speed_radps

Table 40
Clutch model parameters

Parameter	*Parameter type*	*Reference paragraph*
J_1	Manufacturer	A.9.5.6.15., A.9.6.2.17., A.10.5.2.12.
J_2	Manufacturer	A.9.5.6.15., A.9.6.2.17., A.10.5.2.12.
$M_{cl,maxtorque}$	Manufacturer	A.9.5.6.12., A.9.6.2.14., A.10.5.2.9.
c	Tuneable	default: 0.2
$slip_{limit}$	Tuneable	default: 1
$pedal_{limit}$	Tuneable	default: 0.8
τ_1	Manufacturer	-

A.9.7.7.2. Continuously variable transmission model

The Continuously Variable Transmission (CVT) model shall represent a mechanical transmission that allows any gear ratio between a defined upper and lower limit. The CVT model shall be in accordance with:

$$M_{CVT,out} = r_{CVT} \times M_{CVT,in} \times \eta_{CVT} \quad (183)$$

Where:

$M_{CVT,in}$ is the CVT input torque, Nm

$M_{CVT,out}$ is the CVT output torque, Nm

r_{CVT} is the CVT ratio

η_{CVT} is the CVT efficiency

The CVT efficiency shall be defined as function of input torque, output speed and gear ratio:

$$\eta_{CVT} = f\,(r_{CVT}, M_{CVT,in}, \omega_{CVT,out}) \quad (184)$$

The CVT model shall assume zero speed slip, so that following relation for speeds can be used:

$$\omega_{CVT,in} = r_{CVT} \times \omega_{CVT,out} \quad (185)$$

The gear ratio of the CVT shall be controlled by a command setpoint and using a first-order representation for the CVT ratio change actuation in accordance with:

$$\frac{d}{dt} r_{CVT} = \frac{1}{\tau_{CVT}} \times (-r_{CVT} + r_{CVT,des}) \quad (186)$$

Where:

τ_{CVT} is the CVT time constant, s

$r_{CVT,des}$ is the CVT commanded gear ratio

For the model as available in the standardized HILS library, the model parameter and interfacing definition is given in Table 41.

Table 41
CVT model parameters and interface

Type / Bus	*Name*	*Unit*	*Description*	*Reference*
Parameter	τ_{CVT}	-	Time constant	dat.timeconstant.value
	η_{CVT}	-	Efficiency	dat.mechefficiency. efficiency.map
Command signal	r_{des}	-	Requested CVT gear ratio	CVT_ratGearReq
Sensor signal	r_{CVT}	-	Actual CVT gear ratio	CVT_ratGearAct_Rt
	ω_{out}	rad/s	Output speed	CVT_nOutAct_radps
	ω_{in}	rad/s	Input speed	CVT_nInAct_radps
Mech in [Nm]	M_{in}	Nm	Torque	phys_torque_Nm
	J_{in}	kgm^2	Inertia	phys_inertia_kgm^2
Mech out [Nm]	M_{out}	Nm	Torque	phys_torque_Nm
	J_{out}	kgm^2	Inertia	phys_inertia_kgm^2
Mech fb in [rad/s]	ω_{out}	rad/s	Rotational speed	phys_speed_radps
Mech fb out [rad/s]	ω_{in}	rad/s	Rotational speed	phys_speed_radps

Table 42
CVT model parameters

Parameter	*Parameter type*	*Reference paragraph*
τ_{CVT}	Manufacturer	-
η_{CVT}	Manufacturer	-

A.9.7.7.3. Final gear model

A final gear transmission with a set of cog wheels and fixed ratio shall be represented in accordance with following equation:

$$\omega_{fg,out} = \omega_{fg,in}/r_{fg} \quad (187)$$

The gear losses shall be considered as torque losses and implemented through an efficiency as:

$$M_{out} = M_{in} \times \eta_{fg}\,(\omega_{fg,in}, M_{in}) \times r_{fg} \quad (188)$$

where the efficiency can be a function of speed and torque, represented in a map.

The final gear inertia shall be included as:

$$J_{out} = J_{in} \times r_{fg}^2 + J_{fg} \quad (189)$$

For the model as available in the standardized HILS library, the model parameter and interfacing definition is given in Table 43.

Table 43
Final gear model parameters and interface

Type / Bus	*Name*	*Unit*	*Description*	*Reference*
Parameter	J_{fg}	kgm^2	Inertia	dat.inertia.value
	r_{fg}	-	Gear ratio	dat.ratio.value
	η_{fg}	-	Efficiency	dat.mechefficiency. efficiency.map
Mech in [Nm]	M_{in}	Nm	torque	phys_torque_Nm
	J_{in}	kgm^2	inertia	phys_inertia_kgm^2
Mech out [Nm]	M_{out}	Nm	torque	phys_torque_Nm
	J_{out}	kgm^2	inertia	phys_inertia_kgm^2
Mech fb in [rad/s]	$\omega_{fg,out}$	rad/s	rotational speed	phys_speed_radps
Mech fb out [rad/s]	$\omega_{fg,in}$	rad/s	rotational speed	phys_speed_radps

Table 44
Final gear model parameters

Parameter	*Specification*	*Reference paragraph*
J_{fg}	Manufacturer	-
r_{fg}	Regulated	A.9.5.6.10., A.9.6.2.10.
η_{fg}	Manufacturer	-

A.9.7.7.4. Mechanical summation gear model

A model for connection of two input shafts with a single output shaft, i.e. mechanical joint, can be modelled using gear ratios and efficiencies in accordance with:

$$M_{out} = \eta_{out} \times r_{out} \times (\eta_{in,1} \times r_{in,1} \times M_{in,1} + \eta_{in,2} \times r_{in,2} \times M_{in,2}) \quad (190)$$

Where:

$M_{in,1}$ is the input torque on shaft 1, Nm

$M_{in,2}$ is the input torque on shaft 2, Nm

M_{out} is the output torque on shaft, Nm

$r_{in,1}$ is the ratio of gear of shaft 1

$r_{in,2}$ is the ratio of gear of shaft 2

$\eta_{in,1}$ is the efficiency on gear of shaft 1

$\eta_{in,2}$ is the efficiency on gear of shaft 2

r_{out} is the ratio of gear on output shaft

η_{out} is the efficiency of gear on output shaft

The efficiencies shall be defined using speed and torque dependent look-up tables (maps).

The inertia of each shaft/gear combination is to be defined and added to the total powertrain inertia.

For the model as available in the standardized HILS library, the model parameter and interfacing definition is given in Table 45.

Table 45
Mechanical connection model parameters and interface

Type / Bus	*Name*	*Unit*	*Description*	*Reference*
Parameter	J_1	kgm^2	Inertia	dat.in1.inertia.value
	$r_{in,1}$	-	Gear ratio	dat.in1.ratio.value
	$\eta_{in,1}$	-	Efficiency	dat.in1.mechefficiency. efficiency.map
	J_2	kgm^2	Inertia	dat.in2.inertia.value
	$r_{in,2}$	-	Gear ratio	dat.in2.ratio.value
	$\eta_{in,2}$	-	Efficiency	dat.in2.mechefficiency. efficiency.map
	J_{out}	kgm^2	Inertia	dat.out.inertia.value
	r_{out}	-	Gear ratio	dat.out.ratio.value
	η_{out}	-	Efficiency	dat.out. mechefficiency.efficiency. map
Mech in 1 [Nm]	$M_{in,1}$	Nm	torque	phys_torque_Nm
	$J_{in,1}$	kgm^2	inertia	phys_inertia_kgm^2
Mech in 2 [Nm]	$M_{in,2}$	Nm	torque	phys_torque_Nm
	$J_{in,2}$	kgm^2	inertia	phys_inertia_kgm^2
Mech out [Nm]	M_{out}	Nm	torque	phys_torque_Nm
	J_{out}	kgm^2	inertia	phys_inertia_kgm^2
Mech fb in [rad/s]	ω_{in}	rad/s	rotational speed	phys_speed_radps
Mech fb out 1 [rad/s]	$\omega_{out,1}$	rad/s	rotational speed	phys_speed_radps
Mech fb out 2 [rad/s]	$\omega_{out,2}$	rad/s	rotational speed	phys_speed_radps

Table 46
Mechanical connection model parameters

Parameter	*Specification*	*Reference paragraph*
J_1	Manufacturer	-
$r_{in,1}$	Manufacturer	-
$\eta_{in,1}$	Manufacturer	-
J_2	Manufacturer	-
$r_{in,2}$	Manufacturer	-
$\eta_{in,2}$	Manufacturer	-
J_{out}	Manufacturer	-
r_{out}	Manufacturer	-
η_{out}	Manufacturer	-

A.9.7.7.5. Retarder model

A retarder model shall be represented by a simple torque reduction as follows:

$$M_{retarder,out} = M_{retarder,in} - u \times M_{retarder,max(\omega_{retarder})} \quad (191)$$

Where:

u is the retarder command signal between 0 and 1

$M_{retarder,max}$ is the (speed dependent) maximum retarder brake torque, Nm

$\omega_{retarder}$ is the retarder speed, rad/s

$M_{retarder,in}$ is the retarder input torque, Nm

$M_{retarder,out}$ is the retarder output torque, Nm

The model shall also implement an inertia load $J_{retarder}$ to be added to the total powertrain inertia.

For the model as available in the standardized HILS library, the model parameter and interfacing definition is given in Table 47.

Table 47
Retarder model parameters and interface

Type / Bus	*Name*	*Unit*	*Description*	*Reference*
Parameter	$M_{retarder,max}$	Nm	Retarder brake torque map	dat.braketorque.torque.vec
	$J_{retarder}$	kgm^2	Inertia	dat.inertia.value
Command signal	u	-	Retarder control signal between 0-1	Ret_flgOnOff
Sensor signal	M_{loss}	Nm	Retarder brake torque	Ret_tqBrkAct_Nm
Mech in [Nm]	M_{in}	Nm	torque	phys_torque_Nm
	J_{in}	kgm^2	inertia	phys_inertia_kgm^2
Mech out [Nm]	M_{out}	Nm	torque	phys_torque_Nm
	J_{out}	kgm^2	inertia	phys_inertia_kgm^2
Mech fb in [rad/s]	ω_{in}	rad/s	rotational speed	phys_speed_radps
Mech fb out [rad/s]	ω_{out}	rad/s	rotational speed	phys_speed_radps

Table 48
Retarder model parameters

Parameter	*Specification*	*Reference paragraph*
$M_{retarder,max}$	Manufacturer	-
$J_{retarder}$	Manufacturer	-

A.9.7.7.6. Spur gear model

A spur gear transmission or fixed gear transmission with a set of cog wheels and fixed gear ratio shall be represented in accordance with following equation:

$$\omega_{spur,out} = \omega_{spur,in}/r_{spur} \quad (192)$$

The gear losses shall be considered as torque losses and implemented through an efficiency implemented as function of speed and torque:

$$M_{out} = M_{in} \times \eta_{spur}(\omega_{spur,in}, M_{in}) \times r_{spur} \quad (193)$$

The gear inertias shall be included as:

$$J_{spur,out} = J_{spur,in} \times r_{spur}^2 + J_{spur} \quad (194)$$

For the model as available in the standardized HILS library, the model parameter and interfacing definition is given in Table 49.

Table 49
Fixed gear model parameters and interface

Type / Bus	*Name*	*Unit*	*Description*	*Reference*
Parameter	J_{spur}	kgm^2	Inertia	dat.in.inertia.value
	r_{spur}	-	Gear ratio	dat.in.ratio.value
	η_{spur}	-	Efficiency	dat.in.mechefficiency. efficiency.map
Mech in [Nm]	M_{in}	Nm	torque	phys_torque_Nm
	J_{in}	kgm^2	inertia	phys_inertia_kgm^2
Mech out [Nm]	M_{out}	Nm	torque	phys_torque_Nm
	J_{out}	kgm^2	inertia	phys_inertia_kgm^2
Mech fb in [rad/s]	$\omega_{spur,out}$	rad/s	rotational speed	phys_speed_radps
Mech fb out [rad/s]	$\omega_{spur,in}$	rad/s	rotational speed	phys_speed_radps

Table 50
Spur gear model parameters

Parameter	*Specification*	*Reference paragraph*
J_{spur}	Manufacturer	-
r_{spur}	Manufacturer	-
η_{spur}	Manufacturer	-

A.9.7.7.7. Torque converter model

A torque converter is a fluid coupling device that transfers the input power from its impeller or pump wheel to its turbine wheel on the output shaft through its working fluid motion. A torque converter equipped with a stator will create torque multiplication in slipping mode operation.

The torque converter shall transfer the input torque to the output torque in accordance with two operating phases: slipping and closed.

The torque converter model shall be defined in accordance with following (differential) equations of motion:

$$J_p \times \dot{\omega}_p = M_{in} - M_p \quad (195)$$

$$J_t \times \dot{\omega}_t = M_t - M_{out} \quad (196)$$

Where:

J_p is the pump inertia, kgm^2

J_t is the turbine inertia, kgm^2

$\dot{\omega}_p$ is the pump rotational speed, rad/s

ω_t is the turbine rotational speed, rad/s

M_{in} is the input torque, Nm

M_{out} is the output torque, Nm

M_p is the pump torque, Nm

M_t is the turbine torque, Nm

The pump torque shall be mapped as function of the speed ratio as:

$$M_p = f_{pump}(\omega_t/\omega_p) \times (\omega_p/\omega_{ref})^2 \quad (197)$$

Where:

ω_{ref} is the reference mapping speed, rad/s

f_{pump} is the mapped pump torque as function of the speed ratio (ω_t/ω_p) at the constant mapping speed ω_{ref}, Nm

The turbine torque shall be determined as an amplification of the pump torque as:

$$M_t = f_{amp}\,(\omega_t/\omega_p) \times M_p \quad (198)$$

Where:

f_{amp} is the mapped torque amplification as function of the speed ratio (ω_t/ω_p)

During closed operation, the following relations shall apply:

$$M_{out} = M_{in} - M_{tc,loss}(\omega_p) \quad (199)$$

$$\omega_t = \omega_p \quad (200)$$

Where:

$M_{tc,loss}$ is the torque loss at locked mode, Nm

A clutch shall be used to switch between the slipping phase and the closed phase. The clutch shall be modelled in the same way as the clutch device in paragraph A.9.7.7.1. During the transition from slipping to closed operation, equation 197 shall be modified as:

$$M_p = f_{pump}(\omega_t/\omega_p) \times (\omega_p/\omega_{ref})^2 + u_{lu} \times M_{lu,maxtorque} \times \tanh(c \times (\omega_p - \omega_t)) \quad (201)$$

Where:

$M_{lu,maxtorque}$ is the maximum torque transfer through the clutch, Nm

u_{lu} is the clutch actuation control signal between 0 and 1

c is a tuning constant for the hyperbolic function *tanh(...)*.

When the speed difference ω_p - ω_t is below the threshold limit $slip_{limit}$ and the clutch actuator is above the threshold position u_{limit}, the clutch is considered not to be slipping and shall be considered as locked (closed).

The lock-up device actuator shall be represented as a first order system:

$$\dot{u}_{\mathrm{lu}} = -\frac{1}{\tau_1} \times (u_{\mathrm{lu}} - u) \qquad (202)$$

Where:

$\dot{u}_{\mathrm{lu}}$ is the lock-up actuator position between 0 and 1

u is the desired lock-up actuator position between 0 and 1

τ_1 is the time constant, s

For the model as available in the standardized HILS library, the model parameter and interfacing definition is given in Table 51.

Table 51
Torque Converter model parameters and interface

Type / Bus	*Name*	*Unit*	*Description*	*Reference*
Parameter	J_{p}	kgm^2	Inertia	dat.inertia.in.value
	J_{t}	kgm^2	Inertia	dat.inertia.out.value
	$M_{\mathrm{lu,maxtorque}}$	Nm	Maximum clutch torque	dat.clutch.maxtorque.value
	c	-	Tuning constant	dat.clutch.tanh.value
	$slip_{\mathrm{limit}}$	rad/s	Slipping clutch, relative speed limit	dat.clutch.speedtolerance. value
	u_{limit}	-	Slipping clutch, pedal limit	dat.clutch.threshold.value
	τ_1	s	Time constant actuator	dat.clutch.actuator. timeconstant.value
	ω_{ref}	rad/s	Reference speed	dat.characteristics.refspeed. value
	$\omega_{\mathrm{t}}/\omega_{\mathrm{p}}$	-	Speed ratio	dat.characteristics. speedratio.vec
	f_{pump}	Nm		dat.characteristics. inputtorque.vec
	f_{amp}	-		dat.characteristics. torqueratio.vec
	-	rad/s	Speed vector for torque loss	dat.characteristics.loss. torque.vec
Command signal	u	boolean	Torque converter lockup signal	TC_flgLockUp_B
Sensor signal	ω_{p}	rad/s	Pump speed	TC_nPumpAct_radps
	M_{p}	Nm	Pump torque	TC_tqPumpAct_Nm
	ω_{t}	rad/s	Turbine speed	TC_nTurbineAct_radps
	M_{t}	Nm	Turbine torque	TC_tqTurbineAct_Nm
Mech in [Nm]	M_{in}	Nm	torque	phys_torque_Nm
	J_{in}	kgm^2	inertia	phys_inertia_kgm2
Mech out [Nm]	M_{out}	Nm	torque	phys_torque_Nm
	J_{out}	kgm^2	inertia	phys_inertia_kgm2

Type / Bus	*Name*	*Unit*	*Description*	*Reference*
Mech fb in [rad/s]	ω_t	rad/s	rotational speed	phys_speed_radps
Mech fb out [rad/s]	ω_p	rad/s	rotational speed	phys_speed_radps

Table 52
Torque converter model parameters

Parameter	*Specification*	*Reference paragraph*
J_1	Manufacturer	-
J_2	Manufacturer	-
$M_{lu,maxtorque}$	Manufacturer	-
c	Tuneable	default: 0.2
$slip_{limit}$	Tuneable	default: 3
u_{limit}	Tuneable	default: 0.8
f_{pump}	Manufacturer	-
f_{amp}	Manufacturer	-
M_{loss}	Manufacturer	-

A.9.7.7.8. Shift transmission model

The shift transmission model shall be implemented as gears in contact, with a specific gear ratio r_{gear} in accordance with:

$$\omega_{tr,in} = \omega_{tr,out} \times r_{gear} \quad (203)$$

All losses in the transmission model shall be defined as torque losses and implemented through a fixed transmission efficiency for each individual gear. The transmission model shall than be in accordance with:

$$M_{out} = \begin{cases} M_{in} \times r_{gear} \times \eta_{gear}, & for\ M_{in} \leq 0 \\ M_{in} \times r_{gear} / \eta_{gear}, & for\ M_{in} > 0 \end{cases} > \quad (204)$$

The total gearbox inertia shall depend on the active gear selection and is defined with following equation:

$$J_{gear,out} = J_{gear,in} \times r_{gear}^2 + J_{gear,out} \quad (205)$$

For the model as available in the standardized HILS library, the model parameter and interfacing definition is given in Table 53.

The model in the standardized HILS library includes a clutch model. This is used to enable a zero torque transfer during gearshifts. Other solutions are possible. The time duration where the transmission is not transferring torque is defined as the torque interrupt time $t_{interrupt}$. This implementation directly links some of the parameters listed in Table 53 to the clutch model as described in paragraph A.9.7.7.1.

Table 53
Shift transmission model parameters and interface

Type / Bus	*Name*	*Unit*	*Description*	*Reference*
Parameter	nr_{gears}	-	Number of gears	dat.nofgear.value
	$gear_{num}$	-	Gear numbers (vector)	dat.gear.number.vec
	$J_{gearbox}$	kgm^2	Inertia (vector)	dat.gear.inertia.vec
	r_{gear}	-	Gear ratio (vector)	dat.gear.ratio.vec
	η_{gear}	-	Gear efficiency (map)	dat.gear.mechefficiency. efficiency.map
Clutch related parameters	$t_{interrupt}$	s	Shift time	dat.torqueinterrupt.value
	-	Nm	Maximum torque	dat.maxtorque.value
	c	-	Tuning constant	dat.tanh.value
	-	rad/s	Slipping clutch, relative speed limit	dat.speedtolerance.value
Command signal		-	Requested gear number	Transm_nrGearReq
Sensor signal		-	Actual gear number	Transm_nrGearAct
		boolean	Gear engaged	Transm_flgConnected_B
	ω_{out}	rad/s	Output speed	Transm_nOutAct_radps
	ω_{in}	rad/s	Input speed	Transm_nInAct_radps
Mech in [Nm]	M_{in}	Nm	torque	phys_torque_Nm
	J_{in}	kgm^2	inertia	phys_inertia_kgm^2
Mech out [Nm]	M_{out}	Nm	torque	phys_torque_Nm
	J_{out}	kgm^2	inertia	phys_inertia_kgm^2
Mech fb in [rad/s]	ω_{out}	rad/s	rotational speed	phys_speed_radps
mech fb out [rad/s]	ω_{in}	rad/s	rotational speed	phys_speed_radps

Table 54
Shift transmission model parameters

Parameter	*Specification*	*Reference paragraph*
$t_{interrupt}$	Manufacturer	A.9.5.6.13., A.9.6.2.15., A.10.5.2.10.
$gear_{num}$	Manufacturer	Example: 0, 1, 2, 3, 4, 5, 6
nr_{gear}	Manufacturer	-
$J_{gearbox}$	Manufacturer	-
r_{gear}	Manufacturer	-
η_{gear}	Regulated	A.9.5.6.11., A.9.6.2.11., A.10.5.2.6.
dat.maxtorque.value	Tuneable	-
dat.tanh.value	Tuneable	-
dat.speedtolerance.value	Tuneable	-

A.9.7.8. Rechargeable Energy Storage Systems

A.9.7.8.1. Battery model

The battery model isbased on the representation using resistor and capacitor circuits as shown in Figure 36.

Figure 36
Representation diagram for RC-circuit battery model

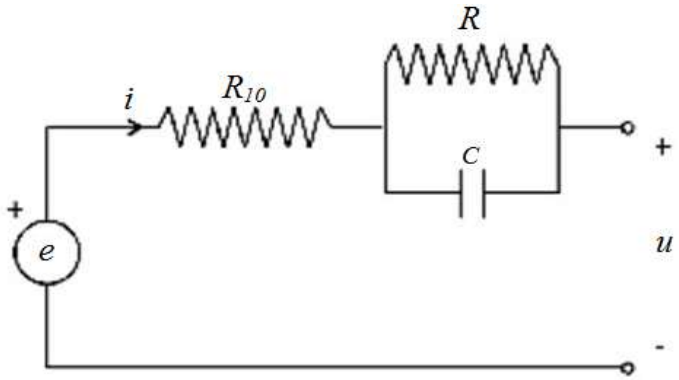

The battery voltage shall satisfy:

$$u = e - R_{i0} \times i - u_{RC} \quad (206)$$

With:

$$\frac{d}{dt} u_{RC} = -\frac{1}{R \times C} \times u_{RC} + \frac{1}{C} \times i \quad (207)$$

The open-circuit voltage e, the resistances R_{i0} and R and the capacitance C shall all have dependency of the actual energy state of the battery and be modelled using tabulated values in maps. The resistances R_{i0} and R and the capacitance C shall have current directional dependency included.

The battery state-of-charge SOC shall be defined as:

$$SOC = SOC(0) - \int_0^t \frac{i}{3600 \times CAP} dt \quad (208)$$

Where:

$SOC(0)$ is the initial state of charge at test start

CAP is the battery capacity, Ah

The battery can be scalable using a number of cells.

The battery model provides a thermodynamics model that may be used and applies similar modelling as for the electric machine system in accordance with:

$$P_{loss,bat} = R_{i0} \times i^2 + R \times i_R{}^2 = R_{i0} \times i^2 + \frac{u_{RC}{}^2}{R} \quad (209)$$

The power losses are converted to heat energy affecting the battery temperature that will be in accordance with:

$$\dot{T}_{\mathrm{bat}} = \frac{1}{\tau_{\mathrm{bat,heat}}} \times (P_{\mathrm{loss}} - (T_{\mathrm{bat}} - \mathrm{T}_{\mathrm{bat,cool}}) / \mathrm{R}_{\mathrm{bat,th}}) \qquad (210)$$

Where:

$\dot{T}_{\mathrm{bat}}$ is the battery temperature, K

$T_{\mathrm{bat,heat}}$ is the thermal capacity for battery thermal mass, J/K

$T_{\mathrm{bat,cool}}$ is the battery cooling medium temperature, K

$R_{\mathrm{bat,th}}$ is the thermal resistance between battery and cooling fluid, K/W

For the model as available in the standardized HILS library, the model parameter and interfacing definition is given in Table 55.

Table 55
Battery model parameters and interface

Type / Bus	*Name*	*Unit*	*Description*	*Reference*
Parameter	n_s	-	Number of cells connected in series	dat.ns.value
	n_p	-	Number of cells connected in parallel	dat.np.value
	CAP	Ah	Cell capacity	dat.capacity.value
	SOC(0)	-	Initial state of charge	dat.initialSOC.value
	e	V	Open circuit voltage =f(SOC)	dat.ocv.ocv.vec
	R_{i0}	Ω	Cell resistance =f(SOC)	dat.resi.charge.R0.vec dat.resi.discharge.R0.vec
	R	Ω	Cell resistance =f(SOC)	dat.resi.charge.R.vec dat.resi.discharge.R.vec
	C	F	Cell resistance =f(SOC)	dat.resi.charge.C.vec dat.resi.discharge.C.vec
Optional parameters	$\tau_{\mathrm{bat,heat}}$	J/K	Thermal capacity	dat.cm.value
	R_{th}	K/W	Thermal resistance	dat.Rth.value
	-	-	Properties of the cooling fluid	dat.coolingFluid
Sensor signal	*i*	A	Actual current	REESS_iAct_A
	u	V	Actual output voltage	REESS_uAct_V
	SOC	-	State of charge	REESS_socAct_Rt
	T_{bat}	K	Battery temperature	REESS_tAct_K
Elec out [V]	*u*	V	Voltage	phys_voltage_V
Elec fb in [A]	*i*	A	Current	phys_current_A

Table 56
Battery model parameters

Parameter	*Specification*	*Reference paragraph*
n_s	Manufacturer	-
n_p	Manufacturer	-
CAP	Regulated	A.9.5.6.4., A.9.6.2.4., A.9.8.5.
SOC(0)	Manufacturer	-
e	Regulated	A.9.5.6.4., A.9.6.2.4., A.9.8.5.
R_{i0}	Regulated	A.9.5.6.4., A.9.6.2.4., A.9.8.5.
R	Regulated	A.9.5.6.4., A.9.6.2.4., A.9.8.5.
C	Regulated	A.9.5.6.4., A.9.6.2.4., A.9.8.5.

A.9.7.8.2. Capacitor model

A diagram for the capacitor model is shown in figure 37.

Figure 37
Capacitor model diagram

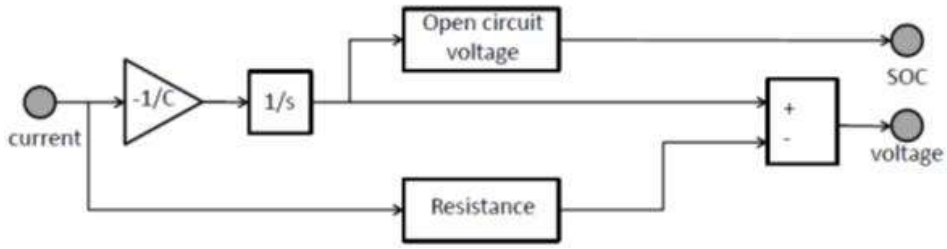

A capacitor model shall satisfy:

$$u = u_C - R_i \times i \tag{211}$$

Where u_C is the capacitor voltage and R_i is the internal resistance. The capacitor voltage shall be determined in accordance with:

$$u_C = -\frac{1}{C} \times \int idt \tag{212}$$

Where C is the capacitance.

For a capacitor system the state-of-charge is directly proportional to the capacitor voltage:

$$SOC_{cap} = \frac{u_C - V_{min}}{V_{C,max} - V_{C,min}} \tag{213}$$

Where:

$V_{C,min}$ and $V_{C,max}$ are, respectively, the minimum and maximum capacitor voltage, V

The capacitor can be scalable using a number of capacitors connected in parallel and series.

The capacitor model provides a thermodynamics model similar to the battery model.

For the model as available in the standardized HILS library, the model parameter and interfacing definition is given in Table 57.

Table 57
Capacitor model parameters and interface

Type / Bus	*Name*	*Unit*	*Description*	*Reference*
Parameter	n_s	-	Number of cells connected in series	dat.ns.value
	n_p	-	Number of cells connected in parallel	dat.np.value
	C	F	Capacitance	dat.C.value
	R_i	Ω	Cell resistance	dat.R.value
	$u_C(0)$	V	Initial capacitor voltage	dat.initialVoltage.value
	$V_{C,min}$	V	Minimum capacitor voltage	dat.Vmin.value
	$V_{C,max}$	V	Maximum capacitor voltage	dat.Vmax.value
Sensor signal	i	A	Actual current	REESS_iAct_A
	u	V	Actual output voltage	REESS_uAct_V
	SOC	-	State of charge	REESS_socAct_Rt
	$T_{capacitor}$	K	Capacitor temperature	REESS_tAct_K
Elec out [V]	u	V	Voltage	phys_voltage_V
Elec fb in [A]	i	A	Current	phys_current_A

Table 58
Capacitor model parameters

Parameter	*Specification*	*Reference paragraph*
n_s	Manufacturer	-
n_p	Manufacturer	-
V_{min}	Regulated	A.9.5.6.5., A.9.6.2.5., A.9.8.6.
V_{max}	Regulated	A.9.5.6.5., A.9.6.2.5., A.9.8.6.
$u_C(0)$	Manufacturer	-
R_i	Regulated	A.9.5.6.5., A.9.6.2.5., A.9.8.6.
C	Regulated	A.9.5.6.5., A.9.6.2.5., A.9.8.6.

A.9.7.8.3. Flywheel model

The flywheel model shall represent a rotating mass that is used to store and release kinetic energy. The flywheel kinetic energy state is defined by:

$$E_{flywheel} = J_{flywheel} \times \omega_{flywheel}^2 \quad (214)$$

Where:

$E_{flywheel}$ is the kinetic energy of the flywheel, J

$J_{flywheel}$ is the inertia of the flywheel, kgm^2

$\omega_{flywheel}$ is the flywheel speed, rad/s

The basic flywheel model diagram is shown in Figure 38.

Figure 38
Flywheel model diagram

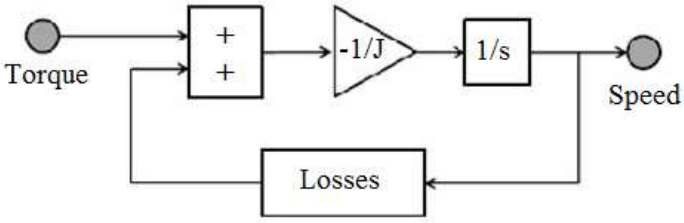

The flywheel model shall be defined in accordance with following differential equation:

$$J_{flywheel} \times \frac{d}{dt}\omega_{flywheel} = M_{flywheel,in} - M_{flywheel,bss}(\omega_{flywheel}) \quad (215)$$

Where:

$M_{flywheel,in}$ is the input torque to flywheel, Nm

$M_{flywheel,loss}$ is the (speed dependent) flywheel loss, Nm

The losses may be determined from measurements and modelled using maps.

The flywheel speed shall be restricted by a lower and upper threshold value, respectively, $\omega_{flywheel_low}$ and $\omega_{flywheel_high}$:

$$\omega_{flywheel_bw} \leq \omega_{flywheel} \leq \omega_{flywheel_high} \quad (216)$$

For the model as available in the standardized HILS library, the model parameter and interfacing definition is given in Table 59.

Table 59
Flywheel model parameters and interface

Type / Bus	*Name*	*Unit*	*Description*	*Reference*
Parameter	J_{fly}	kgm^2	Inertia	dat.inertia.value
	M_{loss}	Nm	Torque loss map	dat.loss.torqueloss.vec
	$\omega_{flywheel_low}$	rad/s	Lower speed limit	dat.speedlimit.lower.value
	$\omega_{flywheel_high}$	rad/s	Upper speed limit	dat.speedlimit.upper.value
Sensor signal	ω_{fly}	rad/s	Flywheel speed	Flywheel_nAct_radps
Mech in [Nm]	M_{in}	Nm	torque	phys_torque_Nm
	J_{in}	kgm^2	inertia	phys_inertia_kgm^2
Mech fb out [rad/s]	ω_{fly}	rad/s	rotational speed	phys_speed_radps

Table 60
Flywheel model parameters

Parameter	*Specification*	*Reference paragraph*
J_{fly}	Manufacturer	-
M_{loss}	Manufacturer	-
$\omega_{flywheel_low}$	Manufacturer	-
$\omega_{flywheel_high}$	Manufacturer	-

A.9.7.8.4. Accumulator model

A hydraulic accumulator is a pressure vessel to store and release a working medium (either fluid or gas). Commonly, a high pressure accumulator and a low pressure reservoir are part of the hydraulic system. Both the accumulator and reservoir shall be represented using the same modelling approach for which the basis is shown in Figure 39.

Figure 39
Accumulator representation

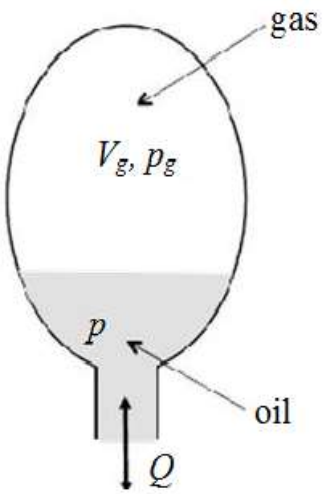

The accumulator shall be represented in accordance with following equations, assuming ideal gas law, gas and fluid pressures to be equal and no losses in the accumulator:

$$\frac{d}{dt}V_{gas} = -Q \tag{217}$$

The process shall be assumed to be a reversible adiabatic process implying that no energy is transferred between the gas and the surroundings:

$$p_{gas} \times V_{gas}^{\gamma} = constant \tag{218}$$

Where:

p_{gas} is the gas pressure, Pa

V_{gas} is the gas volume, m^3

γ is the adiabatic index

The *constant* shall be determined from the precharging of the accumulator:

$$p_{\text{gas,pre}} \times V_{\text{gas,pre}}^{\gamma} = constant \tag{219}$$

Where:

$p_{\text{gas,pre}}$ is the precharged gas pressure, Pa

$V_{\text{gas,pre}}$ is the precharged gas volume, m^3

γ is the adiabatic index

The work resulting from the pressure-volume changes due to this adiabatic process is equal to:

$$W = \frac{-p_{\text{gas,pre}} \times V_{\text{gas,pre}}^{\gamma} \times (V_{\text{gas}}^{1-\gamma} - V_{\text{gas,pre}}^{1-\gamma})}{(1-\gamma) \times 3600000} \tag{220}$$

and the corresponding state-of-charge shall be determined as:

$$SOC_{\text{acc}} = \frac{W}{C_{\text{acc}}} \tag{221}$$

Where:

C_{acc} is the hydraulic accumulator (maximum) energy capacity, kWh

For the model as available in the standardized HILS library, the model parameter and interfacing definition is given in Table 61.

Table 61
Accumulator model parameters and interface

Type / Bus	*Name*	*Unit*	*Description*	*Reference*
Parameter	$p_{\text{gas,pre}}$	Pa	Precharged gas pressure	dat.pressure.precharge.value
	γ	-	Adiabatic index	dat.gas.adiabaticindex.value
	V_{gas}	m^3	Precharged volume	dat.vol.pressure.value
	C_{acc}	kWh	Accumulator capacity	dat.capacity.value
	$V_{\text{gas}}(0)$	m^3	Initial volume	dat.vol.initial.value
Sensor signal	p	Pa	Pressure	Acc_presAct_Pa
	V_{g}	-	Gas volume	Acc_volGas_Rt
Fluid out [Pa]	p	Pa	Pressure	phys_pressure_Pa
Fluid fb in [m3/s]	Q	m^3/s	Volume flow	phys_flow_m3ps

Table 62
Accumulator model parameters

Parameter	*Specification*	*Reference paragraph*
$p_{\text{gas,pre}}$	Manufacturer	-
γ	Manufacturer	-
$V_{\text{gas,pre}}$	Manufacturer	-
$V_{\text{gas}}(0)$	Manufacturer	-
C_{acc}	Manufacturer	-

A.9.7.9. Provisions on OEM specific component models

The manufacturer may use alternative powertrain component models that are deemed to at least include equivalent representation, though with better matching performance, than the models listed in paragraphs A.9.7.2. to A.9.7.8. An alternative model shall satisfy the intent of the library model. Deviations from the powertrain component models specified in paragraphs A.9.7.2. to A.9.7.8. shall be reported and be subject to approval by the Type Approval or certification Authority. The manufacturer shall provide to the Type Approval or certification Authority all appropriate information relating to and including the alternative model along with the justification for its use. This information shall be based on calculations, simulations, estimations, description of the models, experimental results and so on.

The chassis model shall be in accordance with paragraph A.9.7.3.

The reference HV model shall be set up using component models in accordance with paragraphs A.9.7.2. to A.9.7.8.

A.9.8. Test procedures for energy converter(s) and storage device(s)

A.9.8.1. General introduction

The procedures described in paragraphs A.9.8.2. to A.9.8.5. shall be used for obtaining parameters for the component models of the HILS system that is used for the calculation of the (hybrid) engine operating conditions using the HV model.

A manufacturer specific component test procedure may be used in the following cases:

(a) A specific component test procedure is not available in this gtr;

(b) A component test procedure is unsafe or unrepresentative for the specific component;

(c) A component test procedure is not appropriate for a manufacturer specific component model.

These manufacturer specific procedures shall be in accordance with the intent of here specified component test procedures to determine representative data for use of the model in the HILS system. The technical details of these manufacturer component test procedures shall be reported to and subject to approval by the Type Approval or certification Authority along with all appropriate information relating to and including the procedure along with the justification for its use. This information shall be based on calculations, simulations, estimations, description of the models, experimental results and so on.

A.9.8.2. Equipment specification

Equipment with adequate characteristics shall be used to perform tests. Requirements are defined below and shall be in agreement with the linearity requirements and verification of paragraph 9.2.

The accuracy of the measuring equipment (serviced and calibrated in accordance with the handling procedures) shall be such that the linearity requirements, given in Table 63 and checked in accordance with paragraph 9.2., are not exceeded.

Table 63
Linearity requirements of instruments

Measurement system	$\lvert x_{min} \cdot (a_1-1)+a_o \rvert$ *(for maximum test value)*	*Slope,* a_1	*Standard error, SEE*	*Coefficient of determination,* r^2
Speed	≤ 0.05 % max	0.98 – 1.02	≤ 2 % max	≥ 0.990
Torque	≤ 1 % max	0.98 – 1.02	≤ 2 % max	≥ 0.990
Temperatures	≤ 1 % max	0.99 – 1.01	≤ 1 % max	≥ 0.998
Current	≤ 1 % max	0.98 – 1.02	≤ 1 % max	≥ 0.998
Voltage	≤ 1 % max	0.98 – 1.02	≤ 1 % max	≥ 0.998
Power	≤ 2 % max	0.98 – 1.02	≤ 2 % max	≥ 0.990

A.9.8.3. Internal combustion engine

The engine torque characteristics, the engine friction loss and auxiliary brake torque shall be determined and converted to table data as the input parameters for the HILS system engine model. The measurements and data conversion shall be carried out in accordance with paragraphs A.9.8.3.1. through A.9.8.3.7.

A.9.8.3.1. Test conditions and equipment

The test conditions and applied equipment shall be in accordance with the provisions of paragraphs 6. and 9., respectively.

A.9.8.3.2. Engine warm-up

The engine shall be warmed up in accordance with paragraph 7.4.1.

A.9.8.3.3. Determination of the mapping speed range

The mapping speed range shall be in accordance with paragraph 7.4.2.

A.9.8.3.4. Mapping of positive engine torque characteristics

When the engine is stabilized in accordance with paragraph A.9.8.3.2., the engine torque mapping shall be performed in accordance with the following procedure:

(a) The engine torque shall be measured, after confirming that the shaft torque and engine speed of the test engine are stabilized at a constant value for at least one minute, by reading out the braking load or shaft torque of the engine dynamometer. If the test engine and the engine dynamometer are connected via a transmission, the read-out-value shall be divided by the transmission efficiency and gear ratio of the transmission. In such a case, a (shift) transmission with a known (pre-selected) fixed gear ratio and a known transmission efficiency shall be used and specified.

(b) The engine speed shall be measured by reading the speed of the crank shaft or the revolution speed of the engine dynamometer. If the test engine and the engine dynamometer are connected via a transmission, the read-out-value shall be multiplied by the gear ratio.

(c) The engine torque as function of speed and command value shall be measured under at least 100 conditions in total, for the engine speed under at least 10 conditions within a range in accordance with paragraph A.9.8.3.3, and for the engine command values under at least 10 conditions within a range from 100 per cent to 0 per cent operator

command value. The measurement points may be equally distributed and shall be defined using good engineering judgement.

A.9.8.3.5. Measurement of engine friction and auxiliary brake torque characteristics

After the engine is stabilized in accordance with paragraph A.9.8.3.2., the engine friction and auxiliary brake torque characteristics shall be measured as follows:

(a) The measurement of the friction torque of the engine shall be carried out by driving the test engine from the engine dynamometer at unloaded motoring condition (0 per cent operator command value and effectively realizing zero fuel injection) and performing the measurement under at least 10 conditions within a range from maximum to minimum mapping speed in accordance with paragraph A.9.8.3.3. The measurement points may be equally distributed and shall be defined using good engineering judgement.

(b) The engine friction torque including auxiliary braking torque shall be measured by repeating paragraph A.9.8.3.5.(a). with all auxiliary brake systems (such as an exhaust brake, jake brake and so on) fully enabled and operated at their maximum operator demand. This provision shall not apply if the auxiliary brake systems are not used during the actual powertrain test run for the HILS system verification in accordance with paragraph A.9.5.4.

A.9.8.3.6. Measurement of positive engine torque response

When the engine is stabilized in accordance with paragraph A.9.8.3.2., the engine torque response characteristics shall be measured as follows (and illustrated in Figure 40).

The engine speeds A, B and C shall be calculated as follows:

Speed A = n_{lo} + 25 %* (n_{hi} – n_{lo})

Speed B = n_{lo} + 50 %* (n_{hi} – n_{lo})

Speed C = n_{lo} + 75 % *(n_{hi} – n_{lo})

(a) The engine shall be operated at engine speed A and an operator command value of 10 per cent for 20 ± 2 seconds. The specified speed shall be held to within ±20 min^{-1} and the specified torque shall be held to within ±2 per cent of the maximum torque at the test speed.

(b) The operator command value shall be moved rapidly to, and held at 100 per cent for 10 ± 1 seconds. The necessary dynamometer load shall be applied to keep the engine speed within ±150 min^{-1} during the first 3 seconds, and within ±20 min^{-1} during the rest of the segment.

(c) The sequence described in (a) and (b) shall be repeated two times.

(d) Upon completion of the third load step, the engine shall be adjusted to engine speed B and 10 per cent load within 20 ± 2 seconds.

(e) The sequence (a) to (c) shall be run with the engine operating at engine speed B.

(f) Upon completion of the third load step, the engine shall be adjusted to engine speed C and 10 per cent load within 20 ± 2 seconds.

(g) The sequence (a) to (c) shall be run with the engine operating at engine speed C.

(h) Additional sequences (a) to (c) shall be run at selected speed points when selected by the manufacturer.

Figure 40
Engine positive torque response test

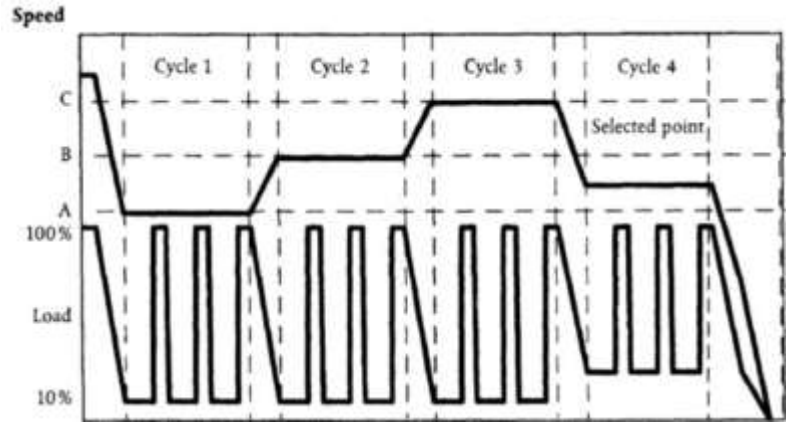

A.9.8.3.7. Engine model torque input data

The tabulated input parameters for the engine model shall be obtained from the recorded data of speed, torque and operator command values as required to obtain valid and representative conditions during the HILS system running. Values equivalent to or lower than the minimum engine speed may be added in accordance with good engineering judgement to prevent non-representative or instable model performance during the HILS system running.

At least 10 points for torque shall be included in the engine maximum torque table with dependency of engine speed and a 100 per cent command value.

At least 10 points for torque shall be included in the engine friction torque table with dependency of engine speed and a 0 per cent command value.

At least 10 points for torque shall be included in the engine auxiliary brake torque table with dependency of engine speed and a 0 per cent engine command value and a 100 per cent auxiliary brake system(s) command value. The input values shall be calculated by subtracting the values determined in paragraph A.9.8.3.5.(a) from the values determined in paragraph A.9.8.3.5.(b) for each set speed. In case the auxiliary brake system(s) are not used during the actual powertrain test run for a HILS system verification in accordance with paragraph A.9.5.4 all values shall be set to zero.

The engine torque response tables with dependency of engine speed shall be determined in accordance with paragraph A.9.8.3.6. and the following procedure for each speed set point (and illustrated in Figure 41):

(a) T_1 shall be 0.1 seconds or a manufacturer specific value.

(b) The instant torque value shall be the average value of 3 load steps at T_1 for each set speed in accordance with paragraph A.9.8.3.6.

(c) T_2 shall be the time it takes to reach 63 per cent of the difference between the instant torque and the average maximum torque of 3 load steps for each set speed in accordance with paragraph A.9.8.3.6.

Figure 41
Engine torque response parameters

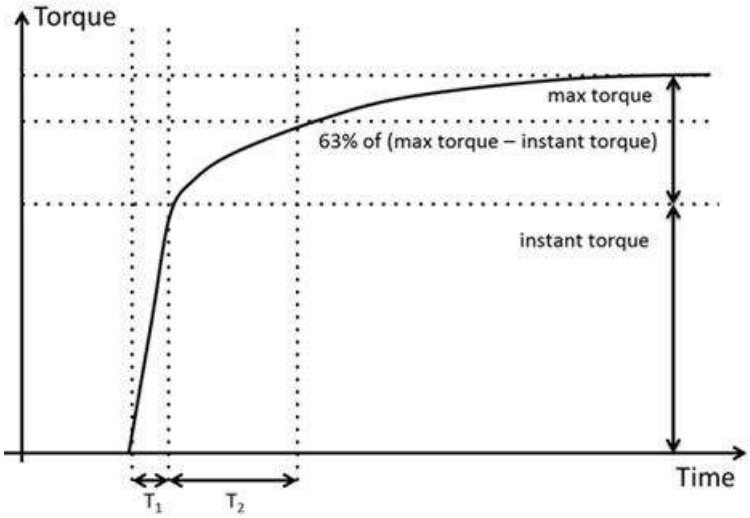

At least 100 points for torque shall be included in the engine torque table with dependency of at least 10 values for engine speed and at least 10 values for the operator command value. The table points may be evenly spread and shall be defined using good engineering judgement. Cubic Hermite interpolation in accordance with Appendix 1 to this annex shall be used when interpolation is required.

A.9.8.4. Electric machine

A.9.8.4.1. General

The torque map and electric power consumption map of the electric machine shall be determined and converted to table data as the input parameters for the HILS system electric machine model. The test method shall be as prescribed and schematically shown in Figure 42.

Figure 42
Electric machine test procedure diagram

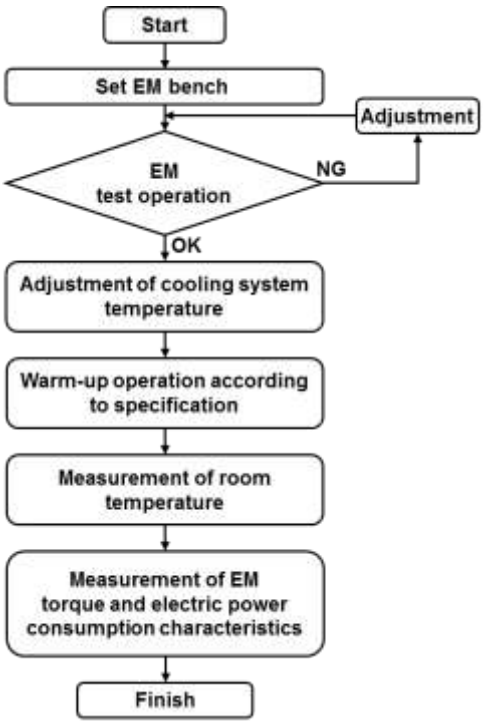

A.9.8.4.2. Test electric machine and its controller

The test electric machine including its controller (high power electronics and ECU) shall be in the condition described below:

(a) The test electric machine and controller shall be serviced in accordance with the inspection and maintenance procedures.

(b) The electric power supply shall be a direct-current constant-voltage power supply or (rechargeable) electric energy storage system, which is capable of supplying/absorbing adequate electric power to/from the power electronics at the maximum (mechanical) power of the electric machine for the duration of the test part.

(c) The voltage of the power supply and applied to the power electronics shall be within ±5 per cent of the nominal voltage of the REESS in the HV powertrain in accordance with the manufacturer specification.

(d) If performance characteristics of the REESS change due to a large voltage variation in the voltage applied to the power electronics, the test shall be conducted by setting at least 3 conditions for the applied voltage: the maximum, minimum and nominal in its control in accordance with the manufacturer specification.

(e) The wiring between the electric machine and its power electronics shall be in accordance with its in-vehicle specifications. However, if its in-vehicle layout is not possible in the test cell, the wiring may be altered within a range not improving the electric machine performance. In addition, the wiring between the power electronics and the power supply need not be in accordance with its in-vehicle specifications.

(f) The cooling system shall be in accordance with its in-vehicle specifications. However, if its in-vehicle layout is not possible in the test cell, the setup may be modified, or alternatively a test cell cooling system may be used, within a range not improving its cooling performance though with sufficient capacity to maintain a normal safe operating temperature as prescribed by the manufacturer.

(g) No transmission shall be installed. However, in the case of an electric machine that cannot be operated if it is separated from the transmission due to the in-vehicle configuration, or an electric machine that cannot be directly connected to the dynamometer, a transmission may be installed. In such a case, a transmission with a known fixed gear ratio and a known transmission efficiency shall be used and specified.

A.9.8.4.3. Test conditions

A.9.8.4.3.1. The electric machine and its entire equipment assembly shall be conditioned at a temperature of 25 °C ± 5 °C.

A.9.8.4.3.2. The test cell temperature shall remain conditioned at 25 °C ± 5 °C during the test.

A.9.8.4.3.3. The cooling system for the test motor shall be in accordance with paragraph A.9.8.4.2.(f).

A.9.8.4.3.4. The test motor shall have been run-in in accordance with the manufacturer's recommendations.

A.9.8.4.4. Mapping of electric machine torque and power maps

A.9.8.4.4.1. General introduction

The test motor shall be driven in accordance with the method in paragraph A.9.8.4.4.2. and the measurement shall be carried out to obtain at least the measurement items in paragraph A.9.8.4.4.3.

A.9.8.4.4.2. Test procedure

The test motor shall be operated after it has been thoroughly warmed up under the warm-up operation conditions specified by the manufacturer.

(a) The torque output of the test motor shall be set under at least 6 conditions on the positive side ("motor" operation) as well as the negative side ("generator" operation) (if applicable), within a range of the electric machine torque command values between the zero (0) to the maximum command values (positive and negative). The measurement points may be equally distributed and shall be defined using good engineering judgement.

(b) The test speed shall be set at least 6 conditions between the stopped state (0 min^{-1}) to the maximum design revolution speed as declared by the manufacturer. Moreover, the torque may be measured at the minimum motor speed for a stable operation of the dynamometer if its measurement in the stopped state (0 min^{-1}) is difficult. The measurement points may be equally distributed and shall be defined using good engineering judgement. In case negative speeds are also used on the in-vehicle installation, this procedure may be expanded to cover the required speed range.

(c) The minimum stabilized running for each command value shall be at least 3 seconds up to the rated power conditions.

(d) The measurement shall be performed with the internal electric machine temperature and power electronics temperature during the test kept within the manufacturer defined limit values. Furthermore, the motor may be temporarily operated with low-power or stopped for the purpose of cooling, as required to enable the continuation of the measurement procedure.

(e) The cooling system may be operated at its maximum cooling capacity.

A.9.8.4.4.3. Measurement items

The following items shall be simultaneously measured after confirmed stabilization of the shaft speed and torque values:

(a) The shaft torque setpoint and actual value. If the test electric machine and the dynamometer are connected via a transmission, the recorded value shall be divided by the known transmission efficiency and the known gear ratio of the transmission;

(b) The (electric machine) speed setpoint and actual values. If the test electric machine and the dynamometer are connected via a transmission, the electric machine speed may be calculated from the recorded speed of the dynamometer by multiplying the value by the known transmission gear ratio;

(c) The DC-power to/from the power electronics shall be recorded from measurement device(s) for the electric power, voltage and current. The input power may be calculated by multiplying the measured voltage by the measured current;

(d) In the operating condition prescribed in paragraph A.9.8.4.4.2., the electric machine internal temperature and temperature of its power electronics (as specified by the manufacturer) shall be measured and recorded as reference values, simultaneously with the measurement of the shaft torque at each test rotational speed;

(e) The test cell temperature and coolant temperature (in the case of liquid-cooling) shall be measured and recorded during the test.

A.9.8.4.5. Calculation equations

The shaft output of the electric machine shall be calculated as follows:

$$P_{\mathrm{em}} = \frac{2\pi}{60} \times n_{\mathrm{em}} \times M_{\mathrm{em}} \qquad (222)$$

Where:

P_{em} is the electric machine mechanical power, W

M_{em} is the electric machine shaft torque, Nm

n_{em} is the electric machine rotational speed, min^{-1}

A.9.8.4.6. Electric machine tabulated input parameters

The tabulated input parameters for the electric machine model shall be obtained from the recorded data of speed, torque, (operator/torque) command values, current, voltage and electric power as required to obtain valid and representative conditions during the HILS system running. At least 36 points for the power maps shall be included in the table with dependency of at least 6 values for speed and at least 6 values for the command value. This shall be valid for both the motor and generator operation separately, if applicable. The

table points may be equally distributed and shall be defined using good engineering judgement. Cubic Hermite interpolation in accordance with Appendix 1 to this annex shall be used when interpolation is required. Values equivalent to or lower than the minimum electric machine speed may be added to prevent non-representative or instable model performance during the HILS system running in accordance with good engineering judgement.

A.9.8.5. Battery

A.9.8.5.1. General

The characteristics of the battery shall be determined and converted to the input parameters for the HILS system battery model in accordance with the measurements and data conversion of paragraphs A.9.8.5.2. through A.9.8.5.6.

A.9.8.5.2. Test battery

The test battery shall be in the condition described below:

(a) The test battery shall be either the complete battery system or a representative subsystem. If the manufacturer chooses to test with a representative subsystem, the manufacturer shall demonstrate that the test results can represent the performance of the complete battery under the same conditions.

(b) The test battery shall be one that has reached its rated capacity *C* after 5 or less repeated charging / discharging cycles with a current of *C/n*, where *n* is a value between 1 and 3 specified by the battery manufacturer.

A.9.8.5.3. Equipment specification

Measuring devices in accordance with paragraph A.9.8.2. shall be used. In addition, the measuring devices shall comply with following requirements:

(a) Temperature accuracy: ≤ 1 °C

(b) Voltage accuracy: ≤ 0.2 per cent of displayed reading

(c) The resolution of voltage measurement shall be sufficiently small to measure the change in voltage during the lowest applied currents in accordance with the procedures of paragraphs A.9.8.5.5.1., A.9.8.5.5.2. and A.9.8.6.5.

(d) Current accuracy: ≤ 0.5 per cent of the displayed reading

A.9.8.5.4. Test conditions

(a) The test battery shall be placed in a temperature controlled test cell. The room temperature shall be conditioned at 298 K ± 2 K (25 °C ± 2 °C) or 318 K ± 2 K (45 °C ± 2 °C), whatever is more appropriate in accordance with the manufacturer.

(b) The voltage shall be measured at the terminals of the test battery.

(c) The battery temperature shall be measured continuously during the test and the temperature measurement shall follow the method specified by the manufacturer or it shall be performed, as shown in Figure 43 below, in the condition not affected by the outside temperature, with the thermometer attached to the central part of the battery and covered with insulation;

(d) The battery cooling system may be either activated or deactivated during the test.

Figure 43
Battery temperature measurement locations
(left: rectangular battery; right: cylindrical battery)

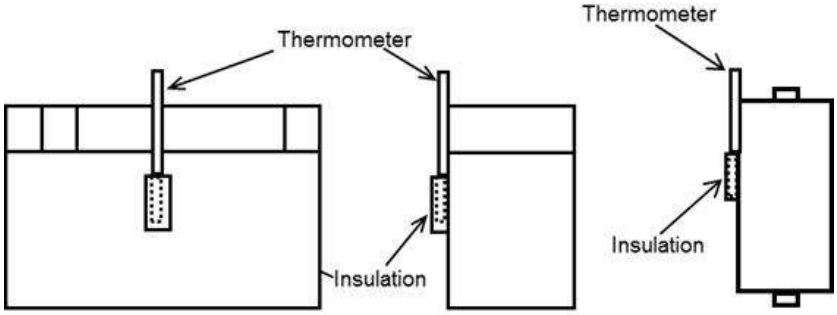

A.9.8.5.5. Battery characteristics test

A.9.8.5.5.1. Open circuit voltage

If the measurement is performed with a representative subsystem, the final result is obtained by averaging at least three individual measurements of different subsystems.

(a) After fully charging the test battery in accordance with the charging method specified by the manufacturer, it shall be soaked for at least 12 hours.

(b) The battery temperature at the start of each SOC discharge level shall be 298 K ± 2 K (25 ºC ± 2 ºC). However, 318 K ± 2 K (45 ºC ± 2 ºC) may be selected by reporting to the type approval or certification authority that this temperature level is more representative for the conditions of the in-vehicle application in the test cycle as specified in Annex 1, paragraph (b).

(c) The test battery shall be discharged with a current of 0.1C in 5 per cent SOC steps calculated based on the rated capacity specified by the battery manufacturer.

(d) Each time a required 5 per cent SOC discharge level is reached the discharge current is disabled and the test battery is soaked for at least 1 hour, but no more than 4 hours (e.g. by disconnecting the cell). The open circuit voltage (OCV) for this SOC level is measured at the end of the soak time.

(e) When the voltage drops below the minimum allowed limit the discharge current is terminated and the last soak period starts. The last OCV value corresponds to the empty battery condition. With this definition of the empty battery the actual measured rated capacity of the test battery can be calculated by integrating the recorded discharging current over time.

(f) Each measured OCV value is now assigned to a corresponding SOC value based on the actual measured rated capacity of the test battery.

If the measurement is performed with a representative subsystem, data obtained through spline interpolation is used for averaging the individual measurements.

As an example, Figure 44 shows a typical voltage response during a complete measurement cycle for a single cell.

Figure 44
Example of typical cell voltage level during the open circuit voltage measurement

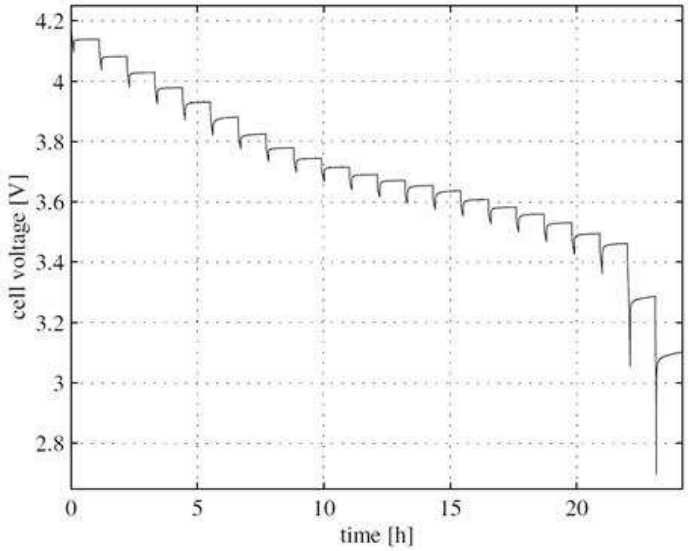

Figure 45
Example of resulting open circuit voltage as a function of SOC
(Measured points are marked with a dot, spline interpolation is used for data in between the recorded measurement values)

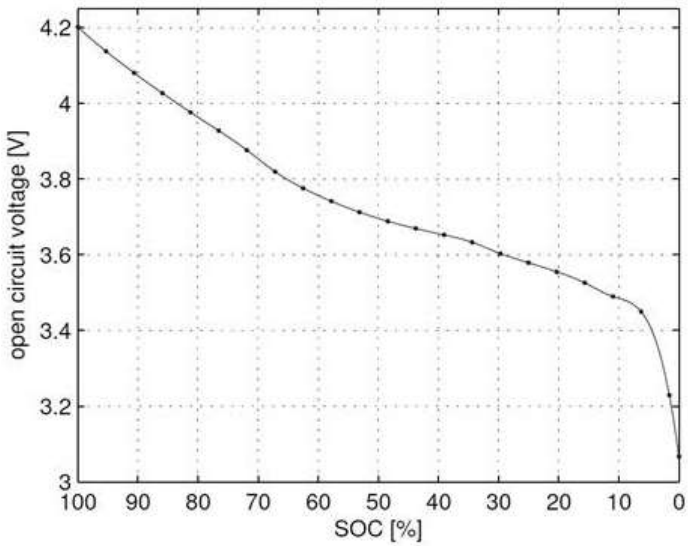

A.9.8.5.5.2. Test procedure for R_0, R and C characteristics

In case the measurement is performed with a representative subsystem, the final results for R_0, R and C shall be obtained by averaging at least five individual measurements of different subsystems.

All SOC values used shall be calculated based on the actual measured rated capacity of the test battery determined in accordance with paragraph A.9.8.5.5.1.

The current and voltage over time shall be recorded at a sampling rate of at least 10 Hz.

(a) The test shall be conducted for at least 5 different levels of SOC which shall be set in such a way as to allow for accurate interpolation. The selected levels of SOC shall at least cover the range used for the test cycle as specified in Annex 1, paragraph (b)

(b) After fully charging the test battery in accordance with the charging method specified by the manufacturer, it shall be soaked for at least 1 hour, but no more than 4 hours.

(c) The adjustment of the desired SOC before starting the test sequence shall be performed by discharging or charging the test battery with a constant current *C/n* in accordance with paragraph A.9.8.5.2.

(d) After the adjustment of the desired SOC, the test battery shall be soaked for at least 1 hour, but no more than 4 hours.

(e) The battery temperature at the start of each test sequence shall be 298 K ± 2 K (25 ºC ± 2 ºC). However, 318 K ± 2 K (45 ºC ± 2 ºC) may be selected by reporting to the type approval or certification authority that this temperature level is more representative for the conditions of the in-vehicle application in the test cycle as specified in Annex 1, paragraph (b).

(f) The test sequence at each SOC level shall be conducted in accordance with the sequence listed in Table 64 and shown in Figure 46.

The highest value of the charging and discharging current I_{max} for the test battery shall be the maximum value used in the in-vehicle application of the hybrid powertrain under test as defined by the manufacturer. The lower step values of the charging and discharging current shall be calculated from this maximum value by successively dividing it by a factor of three for three times (e.g. I_{max} = 27A gives a sequence for the charging and discharging current pulses of 1, 3, 9 and 27A).

During the no-load period, the battery shall be cooled off for at least 10 minutes. It shall be confirmed that the change of temperature is kept within ±2 K before continuing with the next discharging or charging current step.

Table 64
Test sequence at each SOC level

Step	*Action*	*Duration*	*Current level*
1	Discharge pulse	10 seconds	$I_{max}/3^3$
2	No-load period	> 10 minutes	0
3	Charge pulse	10 seconds	$I_{max}/3^3$
4	No-load period	> 10 minutes	0
5	Discharge pulse	10 seconds	$I_{max}/3^2$
6	No-load period	> 10 minutes	0
7	Charge pulse	10 seconds	$I_{max}/3^2$
8	No-load period	> 10 minutes	0
9	Discharge pulse	10 seconds	$I_{max}/3$
10	No-load period	> 10 minutes	0
11	Charge pulse	10 seconds	$I_{max}/3$
12	No-load period	> 10 minutes	0
13	Discharge pulse	10 seconds	I_{max}
14	No-load period	> 10 minutes	0
15	Charge pulse	10 seconds	I_{max}

Figure 46
Test sequence at each SOC level

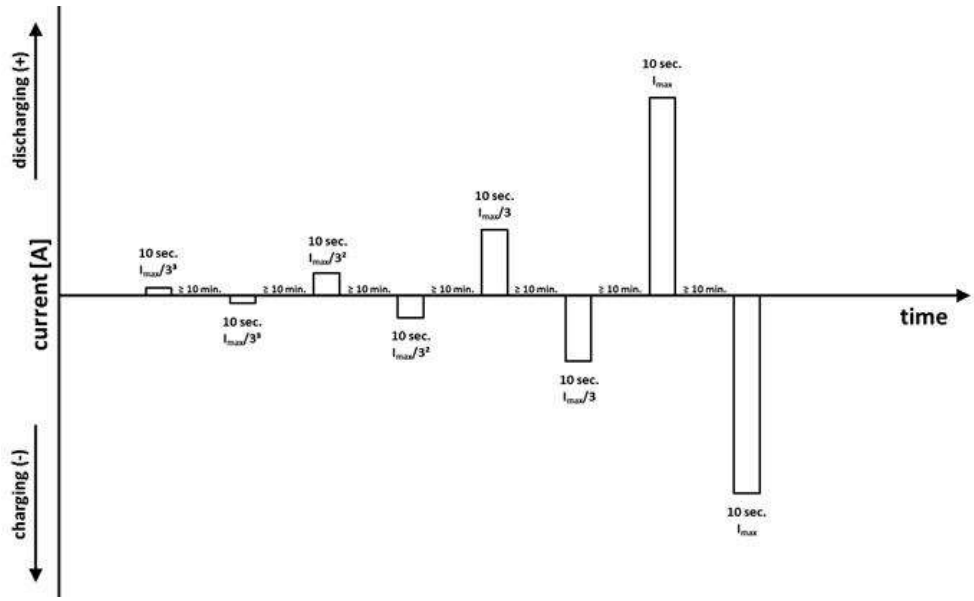

(g) For each individual discharging and charging current pulse as specified in Table 64, the no-load voltage before the start of the current pulse V_{start}, and the voltages at, respectively, 1, 5 and 9 seconds after the pulse has started (V_1, V_5 and V_9) shall be measured (as shown in Figure 47).

If the voltage signal contains signal noise, low-pass filtering of the signal or averaging of the values over a short time frame of ±0.05 to 0.1 second from the respective voltage value may be used.

If a voltage value exceeds the lower limit of discharging voltage or the upper limit of charging voltage, that measurement data shall be discarded.

Figure 47
Example of single voltage pulse during a discharge pulse

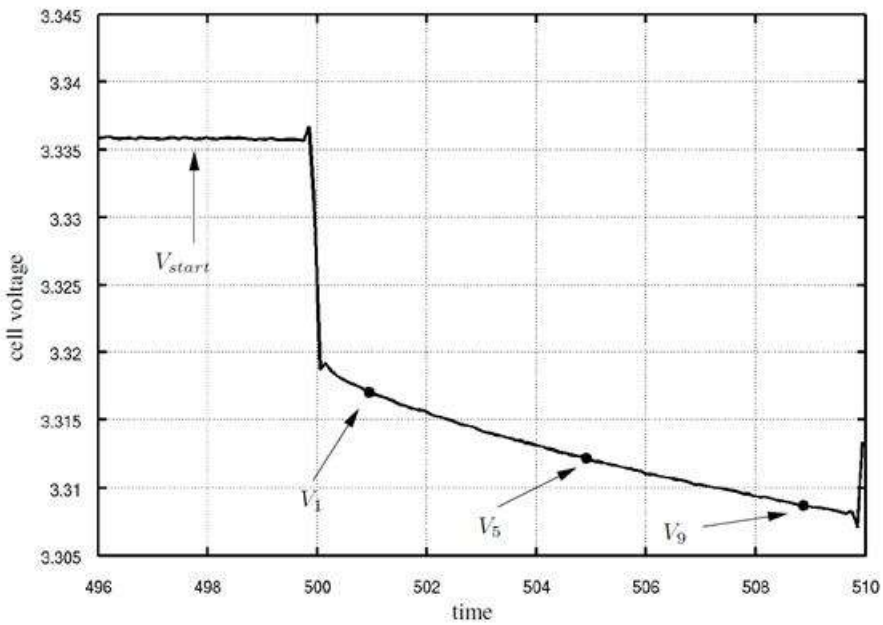

A.9.8.5.6. Battery model input parameters

A.9.8.5.6.1. Calculation of R_0, R and C

The measurement data obtained in accordance with paragraph A.9.8.5.5.2. shall be used to calculate the R_0, R and C values for each charging and discharging current level at each SOC level by using the following equations:

$$V_{oo} = \frac{V_1 \times V_9 - V_5^2}{V_1 - 2 \times V_5 + V_9} \quad (223)$$

$$\tau = \frac{-4}{\ln(1 - (V_9 - V_5)/(V_{oo} - V_5))} \quad (224)$$

For a charge pulse:

$$K = -\tau \times \ln(1 - V_1/V_{oo}) \quad (225)$$

$$V_0 = V_{oo} \times (1 - e^{(1-K)/\tau}) \quad (226)$$

For a discharge pulse:

$$V_0 = \frac{V_1 - V_{oo}}{e^{-1/\tau}} + V_{oo} \quad (227)$$

The values for $R_{0,pulse}$, R_{pulse} and C_{pulse} for a specific current level I_{pulse} shall be calculated as:

$$R_{0,\text{pulse}} = \frac{V_0 - V_{\text{start}}}{I_{\text{pulse}}} \quad (228)$$

$$R_{\text{pulse}} = \frac{V_{\text{oo}} - V_0}{I_{\text{pulse}}} \quad (229)$$

$$C_{\text{pulse}} = \frac{\tau}{R_{\text{pulse}}} \quad (230)$$

The required values for R_0, R and C for, respectively, charging or discharging at one specific SOC level shall be calculated as the mean values of the corresponding charging or discharging current pulses. The same calculations shall be performed for all selected levels of SOC in order to get the specific values for R_0, R and C not only depending on charging or discharging, but also on the SOC.

A.9.8.5.6.2. Correction of R_0 for battery subsystems

In case the measurement is performed with a representative subsystem the final results for all R_0 values may be corrected if the internal connections between the subsystems have a significant influence on the R_0 values.

The validity of the values used for correction of the original R_0 values shall be demonstrated to the type approval or certification authority by calculations, simulations, estimations, experimental results and so on.

A.9.8.6. Capacitor

A.9.8.6.1. General

The characteristics of the (super)capacitor shall be determined and converted to the input parameters for the HILS system supercapacitor model in accordance with the measurements and data conversion of paragraphs A.9.8.6.2. through A.9.8.6.7.

The characteristics for a capacitor are hardly dependent of its state of charge or current, respectively. Therefore only a single measurement is prescribed for the calculation of the model input parameters.

A.9.8.6.2. Test supercapacitor

The test supercapacitor shall be either the complete supercapacitor system or a representative subsystem. If the manufacturer chooses to test with a representative subsystem, the manufacturer shall demonstrate that the test results can represent the performance of the complete supercapacitor under the same conditions.

A.9.8.6.3. Equipment specification

Measuring devices that meet the requirements in accordance with paragraph A.9.8.5.3. shall be used.

A.9.8.6.4. Test conditions

(a) The test supercapacitor shall be placed in a temperature controlled test cell. The room temperature shall be conditioned at 298 K ± 2 K (25 °C ± 2 °C) or 318 K ± 2 K (45 °C ± 2 °C), whatever is more appropriate in accordance with the manufacturer.

(b) The voltage shall be measured at the terminals of the test supercapacitor.

(c) The supercapacitor cooling system may be either activated or deactivated during the test.

A.9.8.6.5. Supercapacitor characteristics test

In case the measurement is performed with a representative subsystem, the final result is obtained by averaging at least three individual measurements of different subsystems.

(a) After fully charging and then fully discharging the test supercapacitor to its lowest operating voltage in accordance with the charging method specified by the manufacturer, it shall be soaked for at least 2 hours, but no more than 6 hours.

(b) The supercapacitor temperature at the start of the test shall be 298 K ± 2 K (25 ºC ± 2 ºC). However, 318 K ± 2 K (45 ºC ± 2 ºC) may be selected by reporting to the Type Approval or certification Authority that this temperature level is more representative for the conditions of the in-vehicle application in the test cycle as specified in Annex 1.b.

(c) After the soak time, a complete charge and discharge cycle in accordance with Figure 48 with a constant current I_{test} shall be performed. I_{test} shall be the maximum allowed continuous current for the test supercapacitor as specified by the manufacturer or the maximum continuous current occurring in the in-vehicle application.

(d) After a waiting period of at least 30 seconds (t_0 to t_1), the supercapacitor shall be charged with a constant current I_{test} until the maximum operating voltage V_{max} is reached. Then the charging shall be stopped and the supercapacitor shall be soaked for 30 seconds (t_2 to t_3) so that the voltage can settle to its final value V_b before the discharging is started. After that the supercapacitor shall be discharged with a constant current I_{test} until the lowest operating voltage V_{min} is reached. Afterwards (from t_4 onwards) there shall be another waiting period of 30 seconds until the voltage will settle to its final value V_c.

(e) The current and voltage over time, respectively I_{meas} and V_{meas}, shall be recorded at a sampling rate of at least 10 Hz.

(f) The following characteristic values shall be determined from the measurement (illustrated in Figure 48):

V_a	is the no-load voltage right before start of the charge pulse, V
V_b	is the no-load voltage right before start of the discharge pulse, V
V_c	is the no-load voltage recorded 30 seconds after the end of the discharge pulse, V
$\Delta V(t_1), \Delta V(t_3)$	are the voltage changes directly after applying the constant charging or discharging current I_{test} at the time of t_1 and t_3, respectively. These voltage changes shall be determined by applying a linear approximation to the voltage characteristics as defined in detail A of Figure 48 by using the least squares method, V

$\Delta V(t_1)$	is the absolute difference of voltages between V_a and the intercept value of the straight-line approximation at the time of t_1, V
$\Delta V(t_3)$	is the absolute difference of voltages between V_b and the intercept value of the straight-line approximation at the time of t_3, V
$\Delta V(t_2)$	is the absolute difference of voltages between V_{max} and V_b, V
$\Delta V(t_4)$	is the absolute difference of voltages between V_{min} and V_c, V

Figure 48
Example of voltage curve for the supercapacitor measurement

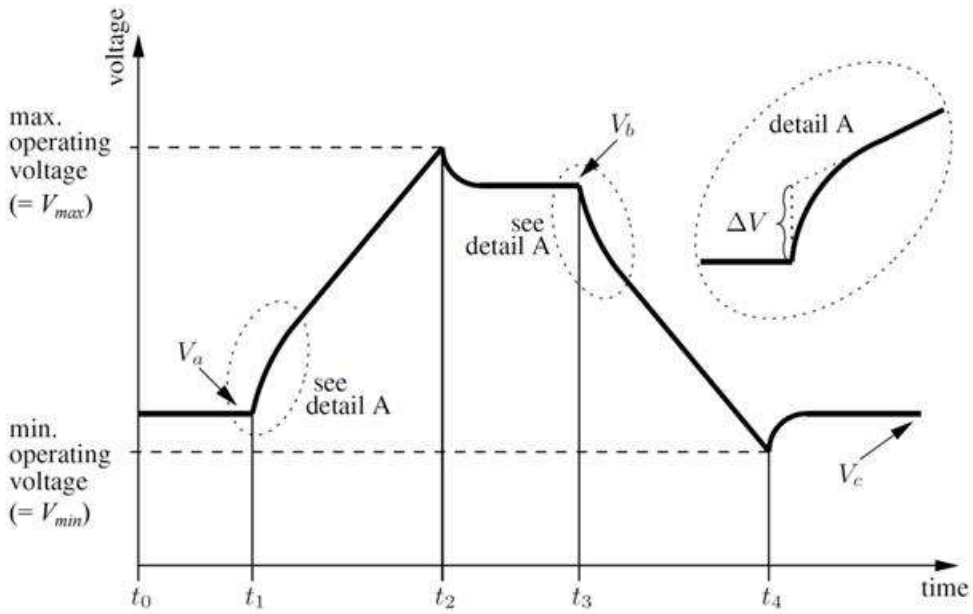

A.9.8.6.6. Capacitor model input parameters

A.9.8.6.6.1. Calculation of *R* and *C*

The measurement data obtained in accordance with paragraph A.9.8.6.5. shall be used to calculate the *R* and *C* values as follows.

(a) The capacitance for charging and discharging shall be calculated as follows:

For charging:

$$C_{\text{charge}} = \frac{\sum_{t1}^{t2} I_{\text{meas}} \times \Delta t}{V_{\text{b}} - V_a} \tag{231}$$

For discharging:

$$C_{\text{discharge}} = \frac{\sum_{t3}^{t4} I_{\text{meas}} \times \Delta t}{V_{\text{c}} - V_b} \tag{232}$$

(b) The internal resistance for charging and discharging shall be calculated as follows:

For charging:

$$R_{\text{charge}} = \frac{\Delta V(t_1) + \Delta V(t_2)}{2 \times I_{test}} \tag{233}$$

For discharging:

$$R_{\text{discharge}} = \frac{\Delta V(t_3) + \Delta V(t_4)}{2 \times I_{test}} \tag{234}$$

(c) For the model, only a single capacitance and resistance are needed and these shall be calculated as follows:

Capacitance *C*:

$$C = \frac{C_{\text{charge}} + C_{\text{discharge}}}{2} \tag{235}$$

Resistance *R*:

$$R = \frac{R_{\text{charge}} + R_{\text{discharge}}}{2} \tag{236}$$

A.9.8.6.6.2. Correction of resistance of supercapacitor subsystems

In case the measurement is performed with a representative subsystem the final results for the system resistance value may be corrected if the internal connections between the subsystems have a significant influence on the resistance value.

The validity of the values used for correction of the original resistance values shall be demonstrated to the Type Approval or certification Authority by calculations, simulations, estimations, experimental results and so on.

Annex 9 - Appendix 1

Hermite interpolation procedure

The Hermite interpolation method approximates each of the intervals with a third order polynomial expression similar to spline interpolation. Hermite interpolation however creates continuous derivatives at connecting points through first derivatives.

The Hermite interpolation polynomial coincides with the given function value and the derivative of the point.

The interpolation polynomial between the interval of $[(x_i, y_i), (x_{i+1}, y_{i+1})]$ is defined in equation 237, where the equation is a cubic polynomial based on the point of (x_i, y_i).

$$f(x) = a \times (x - x_i)^3 + b \times (x - x_i)^2 + c \times (x - x_i) + d \quad (237)$$

Since the Hermite interpolation polynomial coincides with the given function value and the derivative of the point, following conditions result:

$$f(x_i) = y_i = d \quad (238)$$

$$f'(x_i) = y_i' = c \quad (239)$$

If $\Delta x = x_{i+1} - x_i$, then:

$$f(x_{i+1}) = y_{i+1} = a \times \Delta x^3 + b \times \Delta x^2 + y_i' \times \Delta x + y_i \quad (240)$$

$$f'(x_{i+1}) = y_{i+1}' = 3 \times a \times \Delta x^2 + 2 \times b \times \Delta x + y_i' \quad (241)$$

Combining equation 240 and 241 yields:

$$a = \frac{y'_{i+1} + y'_i}{\Delta x^2} - 2 \times \frac{y_{i+1} - y_i}{\Delta x^3} \quad (242)$$

$$b = \frac{y'_{i+1} + 2 \times y'_i}{\Delta x} + 3 \times \frac{y_{i+1} - y_i}{\Delta x^2} \quad (243)$$

The derivatives used in equations 239, 242, and 243 can be calculated as follows:

$$y' = \frac{\left|\frac{y_{i+1} - y_i}{x_{i+1} - x_i}\right| \times \left|\frac{y_i - y_{i-1}}{x_i - x_{i-1}}\right|}{\left(\frac{2 \times x_{i+1} - x_i - x_{i-1}}{3 \times (x_{i+1} - x_{i-1})}\right) \times \left(\frac{y_{i+1} - y_i}{x_{i+1} - x_i}\right) + \left(\frac{x_{i+1} + x_i - 2 \times x_{i-1}}{3 \times (x_{i+1} - x_{i-1})}\right) \times \left(\frac{y_i - y_{i-1}}{x_i - x_{i-1}}\right)} \quad (244)$$

Annex 10

Test procedure for engines installed in hybrid vehicles using the powertrain method

A.10.1. This annex contains the requirements and general description for testing engines installed in hybrid vehicles using the powertrain method.

A.10.2. Test procedure

This annex describes the procedure for simulating a chassis test for a pre-transmission or post-transmission hybrid system in a powertrain test cell. Following steps shall be carried out:

A.10.2.1. Powertrain method

The powertrain method shall follow the general guidelines for execution of the defined process steps as outlined below and shown in the flow chart of Figure 49. The details of each step are described in the relevant paragraphs. Deviations from the guidance are permitted where appropriate, but the specific requirements shall be mandatory.

For the powertrains method, the procedure shall follow:

(a) Selection and confirmation of the HDH object for approval;

(b) Set up of powertrain system;

(c) Hybrid system rated power determination;

(d) Powertrain exhaust emission test;

(e) Data collection and evaluation;

(f) Calculation of specific emissions.

Figure 49
Powertrain method flow chart

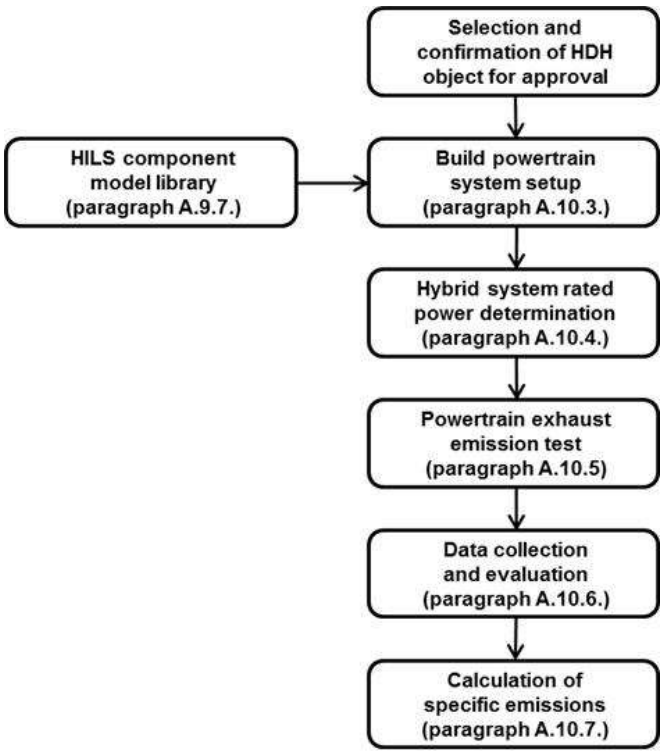

A.10.2.2. Build of the powertrain system setup

The Powertrain system setup shall be constructed in accordance with the provisions of paragraph A.10.3. using the component model library in accordance with paragraph A.9.7. of the HILS method.

A.10.2.3. Hybrid system rated power determination

The hybrid system rated power shall be determined in accordance with paragraph A.10.4.

A.10.2.4. Powertrain exhaust emission test

The powertrain exhaust emission test shall be carried out in accordance with all provisions of paragraph A.10.5.

A.10.3. Set up of powertrain system

A.10.3.1. General introduction

The powertrain system shall consist of, as shown in Figure 50, a HV model and its input parameters, the test cycle as defined in Annex 1, paragraph (b), as well as the complete physical hybrid powertrain and its ECU(s) (hereinafter referred to as the "actual powertrain") and a power supply and required interface(s). The powertrain system setup shall be defined in accordance with paragraphs A.10.3.2. through A.10.3.6. The HILS component library in accordance with paragraph A.9.7. shall be applied in this process. The system update frequency shall be at least 100 Hz to accurately control the dynamometer.

Figure 50
Outline of powertrain system setup

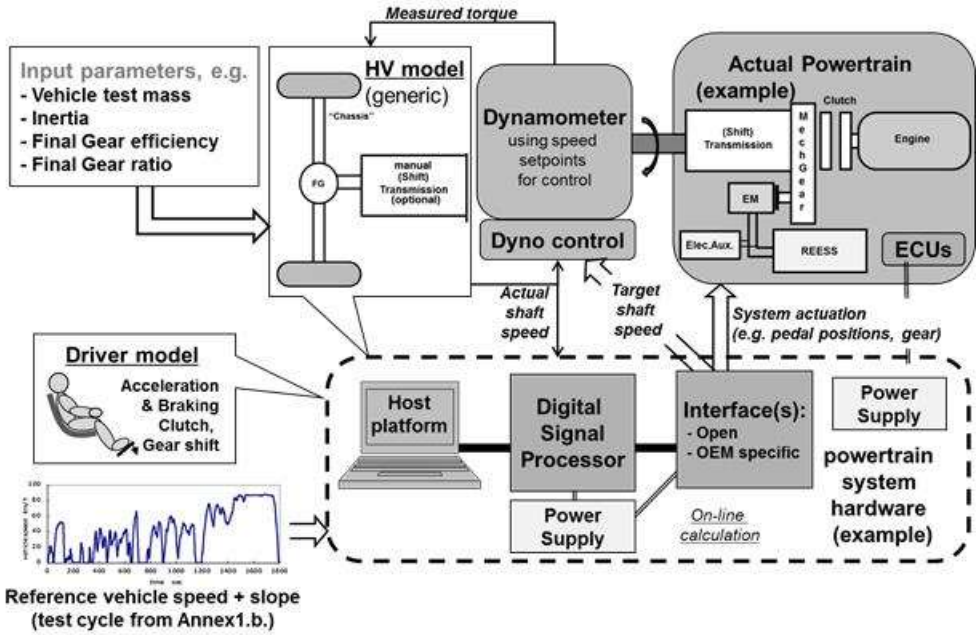

A.10.3.2. Powertrain system hardware

The powertrain system hardware shall have the signal types and number of channels that are required for constructing the interface between all hardware required for the functionality of the powertrain test and to connect to the dynamometer and the actual powertrain.

A.10.3.3. Powertrain system interface

The powertrain system interface shall be specified and set up in accordance with the requirements for the (hybrid) vehicle model in accordance with paragraph A.10.3.5. and required for the operation of the dynamometer and actual powertrain. In addition, specific signals can be defined in the interface model to allow proper operation of the actual ECU(s), e.g. ABS signals. All modifications or signals shall be documented and reported to the Aype Approval Authorities or certification Authority.

The interface shall not contain key hybrid control functionalities as specified in paragraph A.9.3.4.1. of the HILS method.

The actual dynamometer torque shall be used as input to the HV model.

The calculated rotational speed of the HV model (e.g. transmission or final gear input shaft) shall be used as setpoint for the dynamometer speed.

A.10.3.4. Actual powertrain

The powertrain including all of its ECU(s) in accordance with the in-vehicle installation shall be used for the powertrain system setup. The provisions for setup shall be in accordance with paragraph 6. of this gtr and apply to the entire powertrain.

The torque measuring device shall be rigidly mounted closely to the hybrid system output shaft. For example, if a damper is needed it should be mounted on the dynamometer and its damping characteristic should not affect the torque reading.

A.10.3.5. Vehicle model

A vehicle model shall represent all relevant characteristics of the drivetrain and chassis and contain those components not present in the actual powertrain in accordance with paragraph A.10.3.4. The HV model shall be constructed by defining its components in accordance with paragraph A.9.7. of the HILS method. The relevant characteristics are defined as:

(a) Chassis model in accordance with paragraph A.9.7.3. to determine actual vehicle speed as function of powertrain torque and brake torque, tyre rolling resistance, air drag resistance and road gradients. For validation purpose, the actual vehicle speed shall be compared with the desired vehicle speed defined in the test cycle of Annex 1, paragraph (b)

(b) Final gear model in accordance with paragraph A.9.7.7.6. to represent the differential gear functionality, unless it is already included in the actual powertrain.

(c) In case of a manual shift transmission, the transmission model in accordance with paragraph A.9.7.7.8. and the clutch model in accordance with paragraph A.9.7.7.1. may be included as part of the HV model.

The input parameters for the HV model shall be defined in accordance with paragraph A.10.5.2.

A.10.3.6. Driver model

The driver model shall contain all required tasks to drive the HV model over the test cycle and typically includes e.g. accelerator and brake pedal signals as well as clutch and selected gear position in case of a manual shift transmission. The driver model shall use actual vehicle speed for comparison with the desired vehicle speed defined in accordance with the test cycle of Annex 1, paragraph (b)

The driver model tasks shall be implemented as a closed-loop control and shall be in accordance with paragraphs A.9.7.4.2. or A.9.7.4.3.

The shift algorithm for the manual transmission shall be in accordance with paragraph A.9.7.4.3.

A.10.4. Hybrid system rated power determination

The hybrid system rated power shall be determined in accordance with the provisions of paragraph A.9.6.3.

In addition, following conditions shall be respected:

(a) The hybrid powertrain shall be warmed up to its normal operating condition as specified by the manufacturer.

(b) Prior to starting the test, the system temperatures shall be within their normal operating conditions as specified by the manufacturer.

(c) The test cell shall be conditioned between 20 °C and 30 °C.

A.10.5. Powertrain exhaust emission test

A.10.5.1. General introduction

Using the powertrain system setup and all required HV model and interface systems enabled, the exhaust emission test shall be conducted in accordance with the provisions of paragraphs A.10.5.2. to A.10.5.6. Guidance on the test sequence is provided in the flow diagram of Figure 57.

Figure 57
Powertrain exhaust emission test sequence

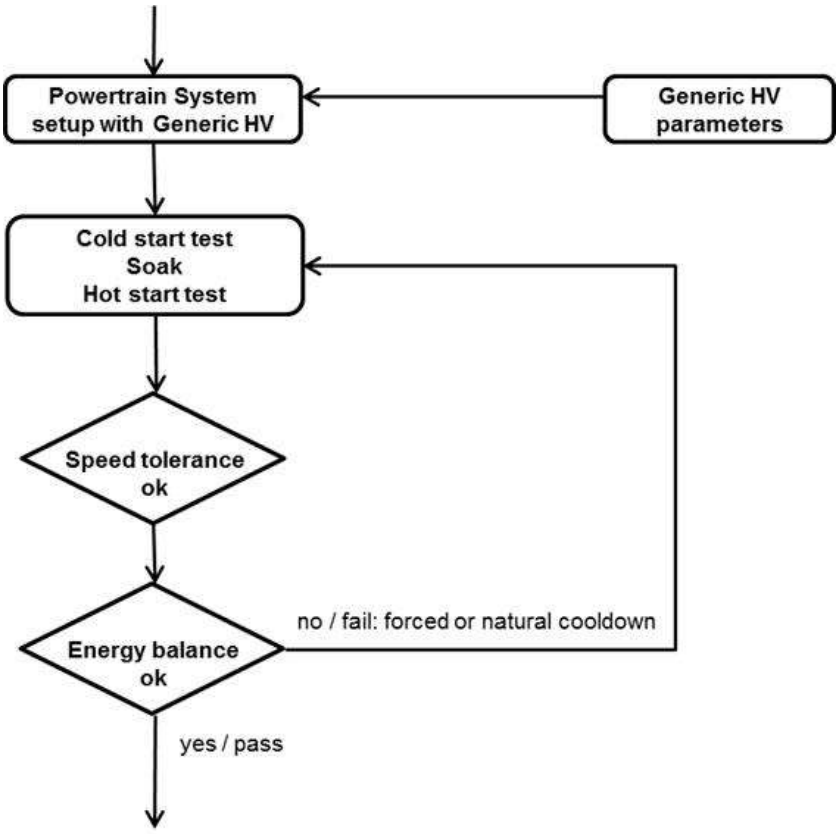

A.10.5.2. Generic vehicle

Generic vehicle parameters shall be used in the HV model and defined in accordance with paragraphs A.10.5.2.1. to A.10.5.2.6. in case the respective components are not present in hardware during the powertrain test.

A.10.5.2.1. Test vehicle mass

The test vehicle mass $m_{vehicle}$ shall be defined with equation 116 using the hybrid system rated power in accordance with paragraph A.10.4.

A.10.5.2.2. Air drag coefficients

The generic vehicle air drag coefficients A_{front} and C_{drag} are calculated in accordance with equation 117, respectively, equation 118 or 119.

A.10.5.2.3. Tyre rolling resistance coefficient

The tyre rolling resistance coefficient f_{roll} is calculated in accordance with equation 120.

A.10.5.2.4. Wheel radius

The wheel radius shall be defined in accordance with paragraph A.9.6.2.9.

A.10.5.2.5. Final gear ratio and efficiency

The final gear ratio and efficiency shall be defined in accordance with paragraph A.9.6.2.10.

A.10.5.2.6. Transmission efficiency

The efficiency of each gear shall be set to 0.95.

A.10.5.2.7. Transmission gear ratio

The gear ratios of the (shift) transmission shall have the manufacturer specified values for the test hybrid powertrain.

A.10.5.2.8. Transmission gear inertia

The inertia of each gear of the (shift) transmission shall have the manufacturer specified value for the test hybrid powertrain.

A.10.5.2.9. Clutch maximum transmitted torque

For the maximum transmitted torque of the clutch and the synchronizer, the design value specified by the manufacturer shall be used.

A.10.5.2.10. Gear change period

The gear-change period for a manual transmission shall be set to one (1.0) second.

A.10.5.2.11. Gear change method

The gear positions shall be defined in accordance with the provisions of paragraph A.9.6.2.16.

A.10.5.2.12. Inertia of rotating sections

The inertia for the post transmission parts shall be defined in accordance with paragraph A.9.6.2.17.

In case a post transmission component is included in the actual hardware (e.g. final gear), this specific component inertia as specified by the manufacturer shall be used to correct the inertia as specified in accordance with paragraph A.9.6.2.17. taking into account the gear ratios between this component and the wheels. The resulting post transmission inertia shall have a minimum value of 0 kgm^2.

A.10.5.2.13. Other input parameters

All other input parameters shall have the manufacturer specified value for the actual test hybrid powertrain.

A.10.5.3. Data to be recorded

All data required to allow for the checks of speed, net energy balance and determination of emissions shall be recorded at 5 Hz or higher (10 Hz recommended).

A.10.5.4. Emission test sequence

The test sequence shall be in accordance with paragraph 7.6.

A.10.5.5. Validation statistics

Each test, either cold or hot start, shall be considered valid if the test conditions of paragraphs A.10.5.5.1. to A.10.5.5.3. are met.

A.10.5.5.1. Validation of vehicle speed

The criteria for vehicle speed shall be in accordance with paragraph A.9.6.4.4.

A.10.5.5.2. Validation of RESS net energy change

The ratio of RESS net energy change to the cumulative fuel energy value shall satisfy the following equation:

$$\left| \Delta E / C_{test} \right| < 0.01 \quad (245)$$

Where:

ΔE is the net energy change of the RESS in accordance with paragraph A.9.5.8.2.3.(a)-(d), kWh

C_{test} is the energy value for the cumulative amount of fuel mass flow during the test, kWh

In case the net energy change criterion is not met, the powertrain system shall be readied for another test run.

A.10.5.5.3. Validation of dynamometer speed

Linear regression of the actual values for the dynamometer speed on the reference values shall be performed for each individual test cycle. The method of least squares shall be used, with the best-fit equation having the form:

$$y = a_1 x + a_o \quad (246)$$

Where:

y is the actual value of speed, min^{-1}

x is the reference value of speed, min^{-1}

a_1 is the slope of the regression line

a_0 is the y-intercept value of the regression line

The Standard Error of Estimate (SEE) of y on x and the coefficient of determination (r^2) shall be calculated for each regression line.

For a test to be considered valid, the criteria of Table 65 shall be met.

Table 65
Statistical criteria for speed validation

Parameter	*Speed control*
Slope, a_1	$0.950 \leq a_1 \leq 1.030$
Absolute value of intercept, $\lvert a_0 \rvert$	≤ 2.0 % of maximum test speed
Standard Error of Estimate, SEE	≤ 5.0 % of maximum test speed
Coefficient of determination, r^2	≥ 0.970

A.10.6. Data collection and evaluation

In addition to the data collection required in accordance with paragraph 7.6.6., the hybrid system work shall be determined over the test cycle by synchronously using the hybrid system rotational speed and torque values at the wheel hub (HV chassis model output signals in accordance with paragraph A.9.7.3.) recorded during the test in accordance with paragraph A.10.5. to calculate instantaneous values of hybrid system power. Instantaneous power values shall be integrated over the test cycle to calculate the hybrid system work W_{sys_test} (kWh). Integration shall be carried out using a frequency of 5 Hz or higher (10 Hz recommended) and include only positive power values.

The hybrid system work W_{sys} shall be calculated as follows:

$$W_{sys} = W_{sys_test} \times \left(\frac{1}{0.95}\right)^2 \quad (247)$$

Where:

W_{sys} is the hybrid system work, kWh

W_{sys_test} is the hybrid system work from the test run, kWh

All parameters shall be reported.

A.10.7. Calculation of the specific emissions

The specific emissions e_{gas} or e_{PM} (g/kWh) shall be calculated for each individual component as follows:

$$e = \frac{m}{W_{sys}} \quad (248)$$

Where:

e is the specific emission, g/kWh

m is the mass emission of the component, g/test

W_{sys} is the cycle work as determined in accordance with paragraph A.10.6., kWh

The final test result shall be a weighted average from cold start test and hot start test in accordance with the following equation:

$$e = \frac{(0.14 \times m_{cold}) + (0.86 \times m_{hot})}{(0.14 \times W_{sys,cold}) + (0.86 \times W_{sys,hot})} \quad (249)$$

Where:

m_{cold} is the mass emission of the component on the cold start test, g/test

m_{hot} is the mass emission of the component on the hot start test, g/test

$W_{sys,cold}$ is the hybrid system cycle work on the cold start test, kWh

$W_{sys,hot}$ is the hybrid system cycle work on the hot start test, kWh

If periodic regeneration in accordance with paragraph 6.6.2. applies, the regeneration adjustment factors $k_{r,u}$ or $k_{r,d}$ shall be multiplied with or be added to, respectively, the specific emission result e as determined in equations 248 and 249.